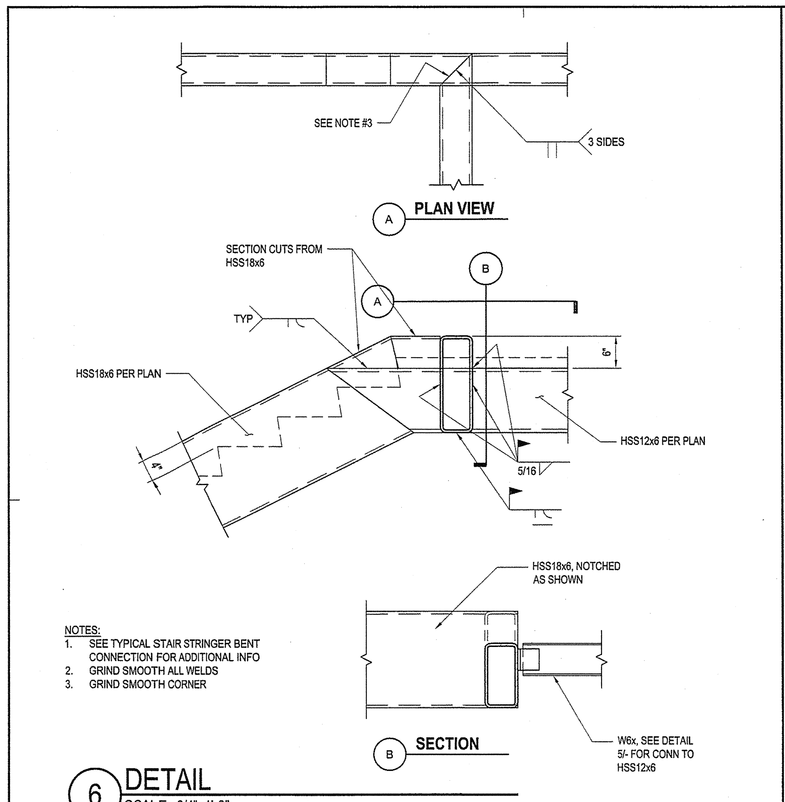

NOTES:
1. SEE TYPICAL STAIR STRINGER BENT CONNECTION FOR ADDITIONAL INFO
2. GRIND SMOOTH ALL WELDS
3. GRIND SMOOTH CORNER

6 DETAIL
SCALE: 3/4"=1'-0"

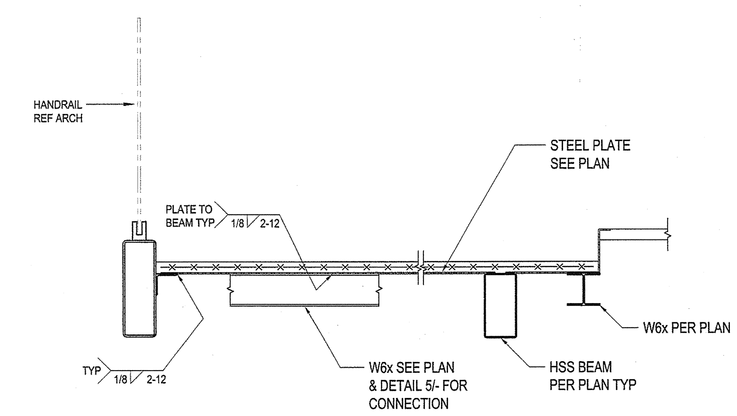

4 DETAIL
SCALE: 3/4"=1'-0"

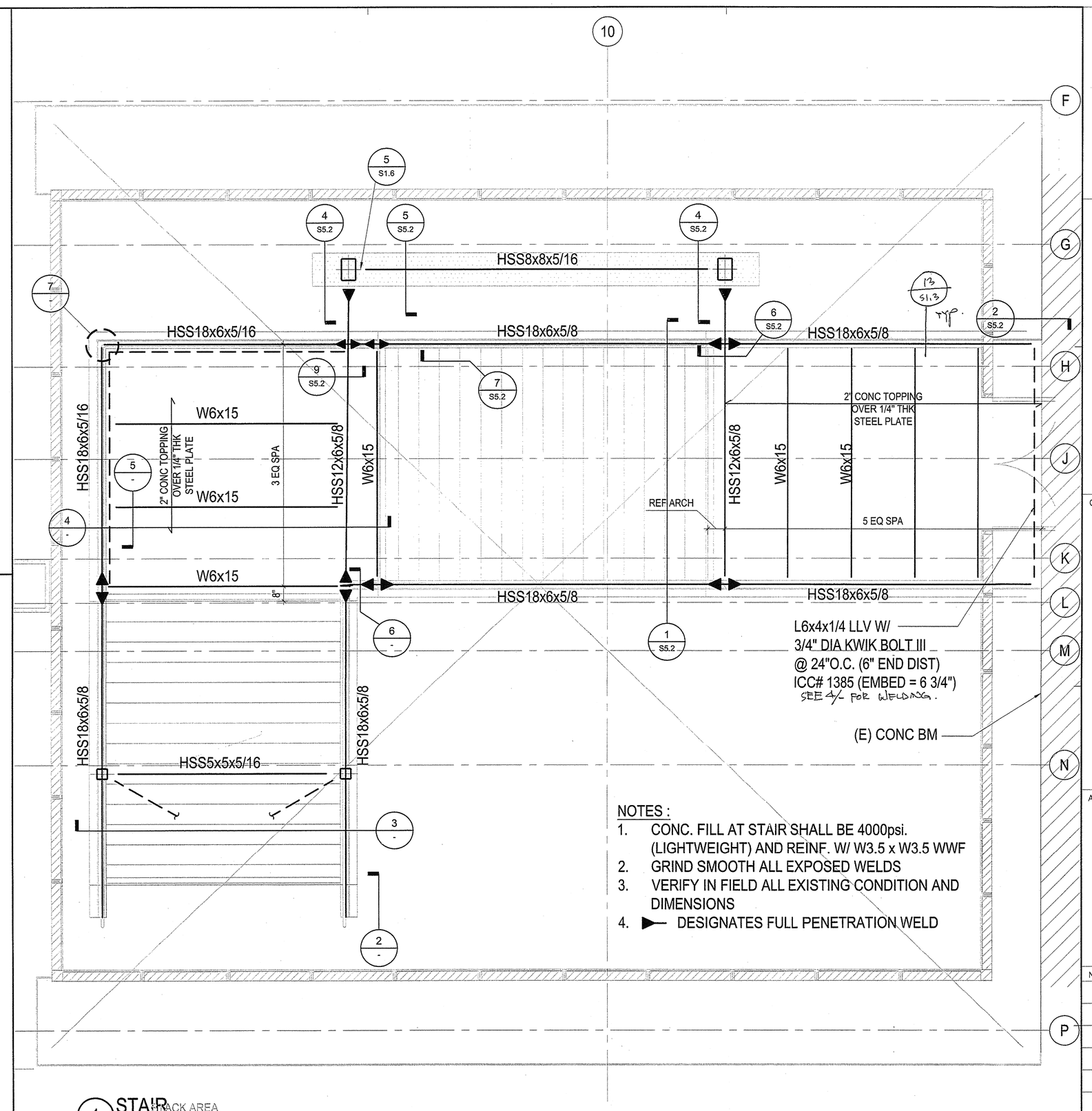

NOTES :
1. CONC. FILL AT STAIR SHALL BE 4000psi. (LIGHTWEIGHT) AND REINF. W/ W3.5 x W3.5 WWF
2. GRIND SMOOTH ALL EXPOSED WELDS
3. VERIFY IN FIELD ALL EXISTING CONDITION AND DIMENSIONS
4. ► DESIGNATES FULL PENETRATION WELD

1 STAIR STACK AREA
SCALE: 3/8=1'-0"

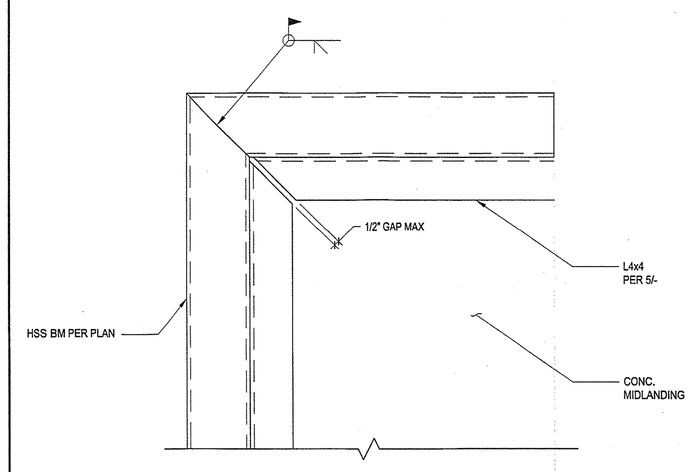

7 DETAIL
SCALE: 1 1/2"=1'-0"

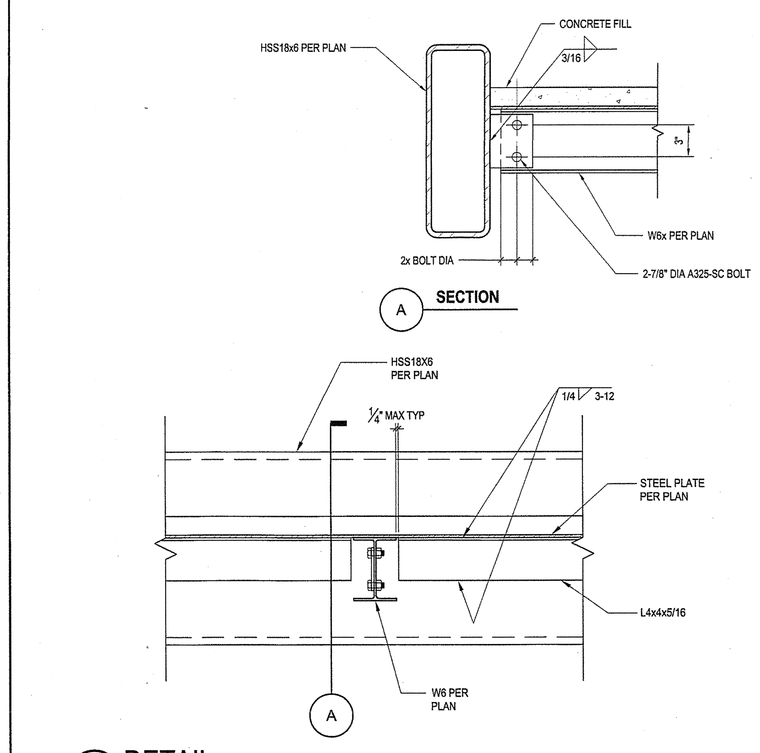

5 DETAIL
SCALE: 1 1/2"=1'-0"

8 DETAIL
SCALE: 1 1/2"=1'-0"

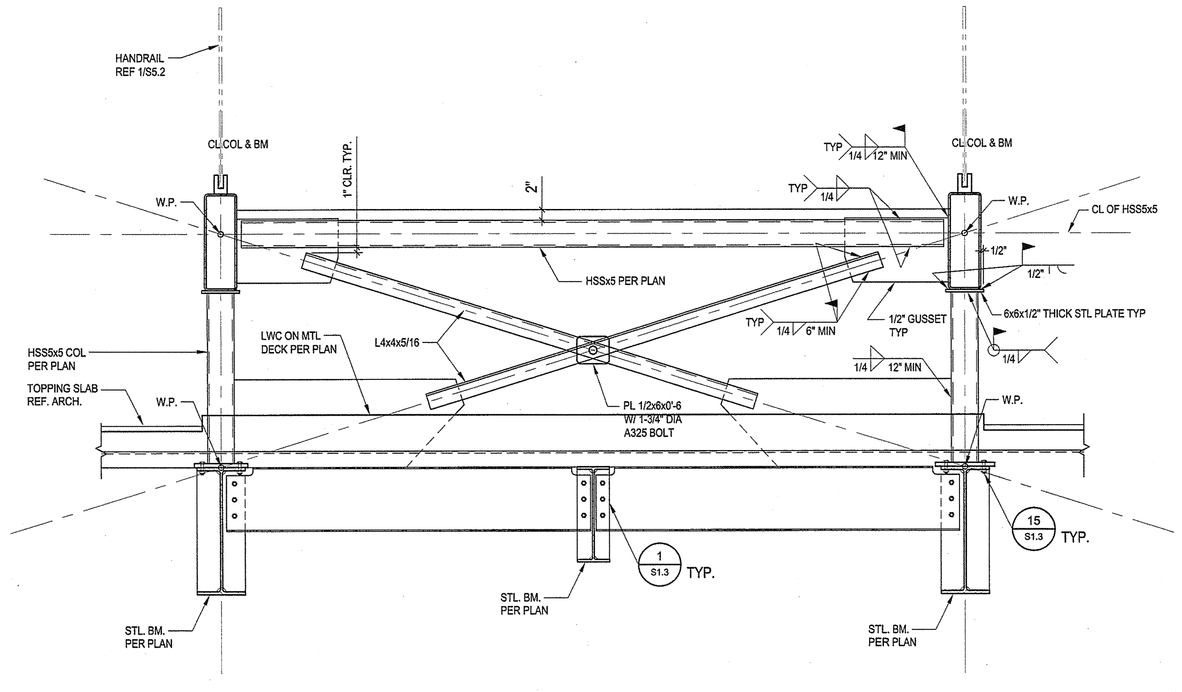

3 DETAIL
SCALE: 3/4=1'-0"

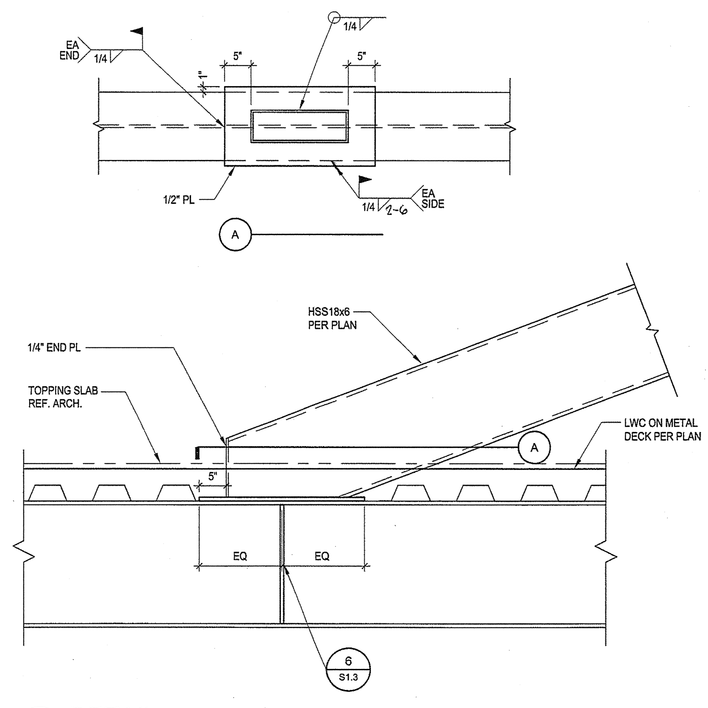

2 DETAIL
SCALE: 3/4=1'-0"

gkkworks
2355 Main Street Suite 220
Irvine | CA 92614
949 250 1500
949 955 2708 fax

Architect Seal

Consultant and Seal

Thornton Tomasetti
Thornton Tomasetti, Inc.
2415 Campus Drive, Suite 110
Irvine CA 926112-8530
T 949.271.3300 F 949.271.

JOB# GG7524.00

Agency Approval

IDENTIFICATION STAMP
DIV. OF THE STATE ARCHITECT
APPL. # 04-109129
AC ___ FLS ___ SS TB
DATE MAY 07 2008

No.	Date	Revision/Issue

Project Name

JAMES B. UTT MEMORIAL LEARNING RESOURCE CENTER RENOVATION
28000 Marguerite Parkway
Mission Viejo, California 92692

Checked By DT | Drawn By MG

Sheet Title

STRUCTURAL DETAILS

Sheet Number

S5.1

Project Number GG7524.00 | Scale 3/4"=1'-0"

© 2007 gkkworks, All Rights Reserved
NO PART OF THE CONTENTS OF THIS DOCUMENT MAY BE REPRODUCED OR TRANSMITTED IN ANY FORM OR BY ANY MEANS WITHOUT THE WRITTEN PERMISSION OF GKKWORKS.

OR531777-S1697 P1 S2 - R C CONSTRUCTION SERVICES - PG 144 OF 235 (P1 S2) 1 SET.1.TIF - 2/3/2010 - 15:34