OR531777--51697 P1 S2 - R C CONSTRUCTION SERVICES - PG 130 OF 235 (P1 S2) 1 SET.TIF - 2/3/2010 - 15:34

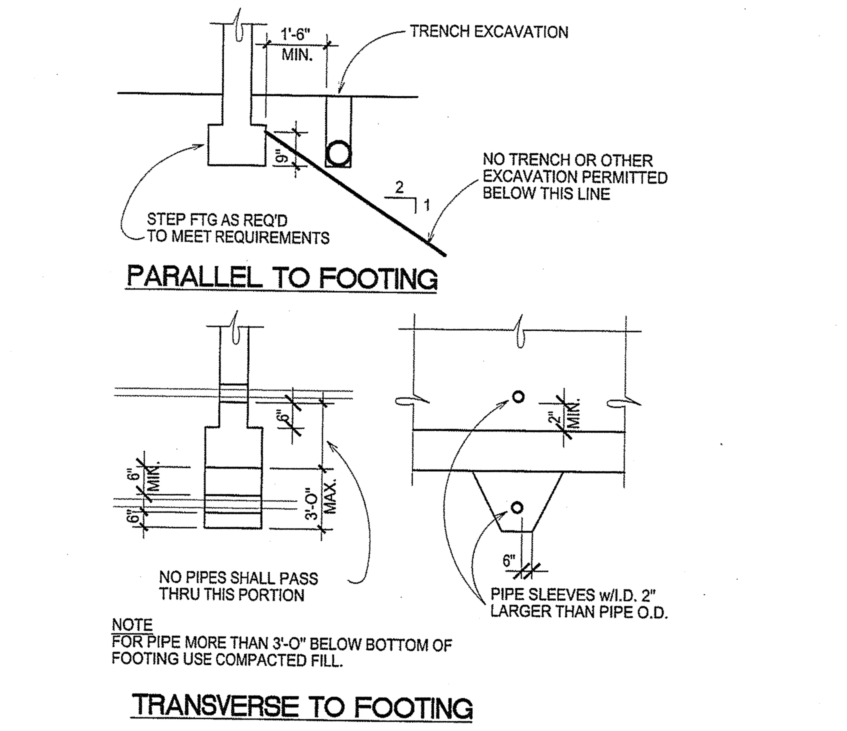

16 DETAIL
N/A

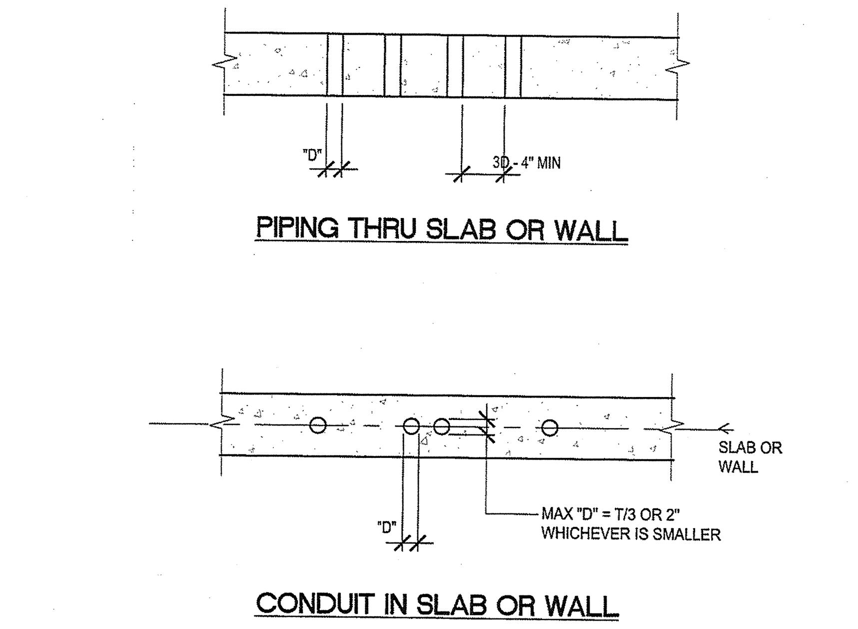

12 PIPES THRU FOOTING
N/A

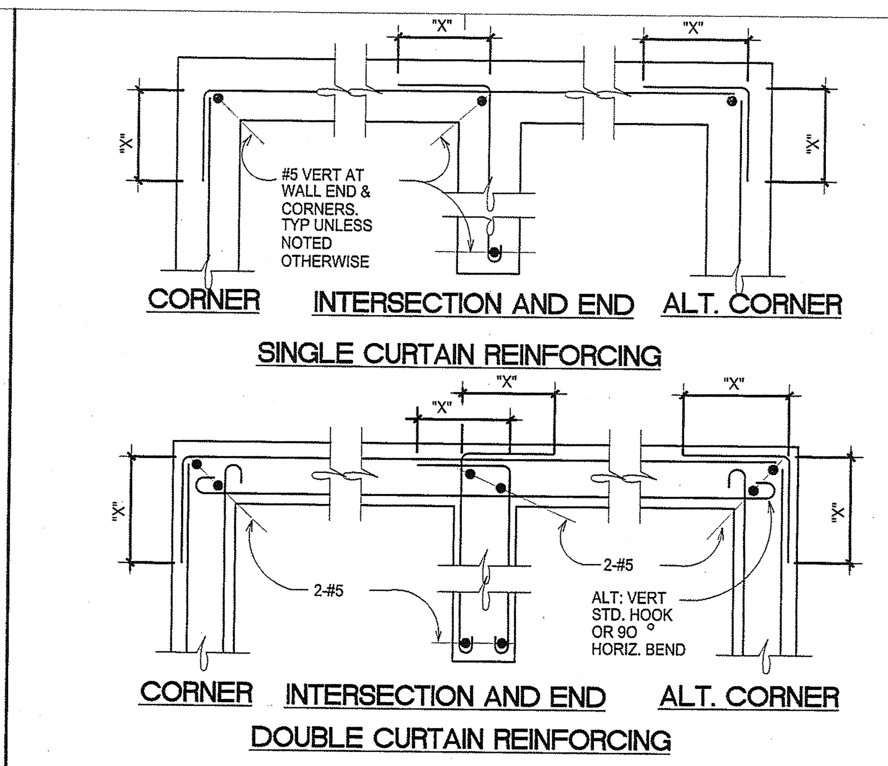

8 REINFORCING AT WALL INTERSECT.
N/A

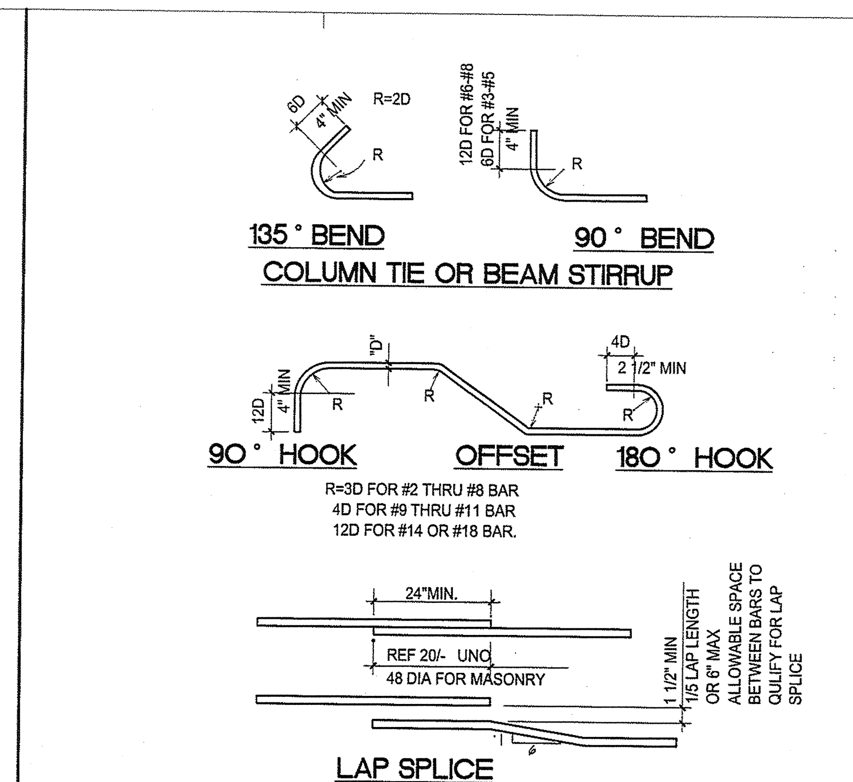

5 REINFORCING STEEL DETAIL
N/A

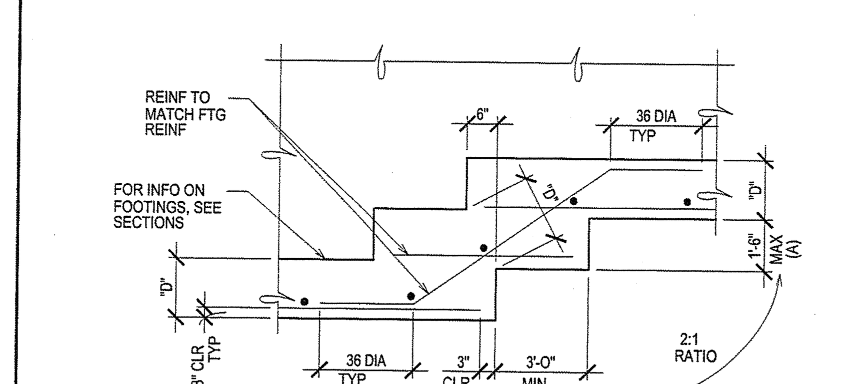

1 STEPPED FOOTING DETAIL
N/A

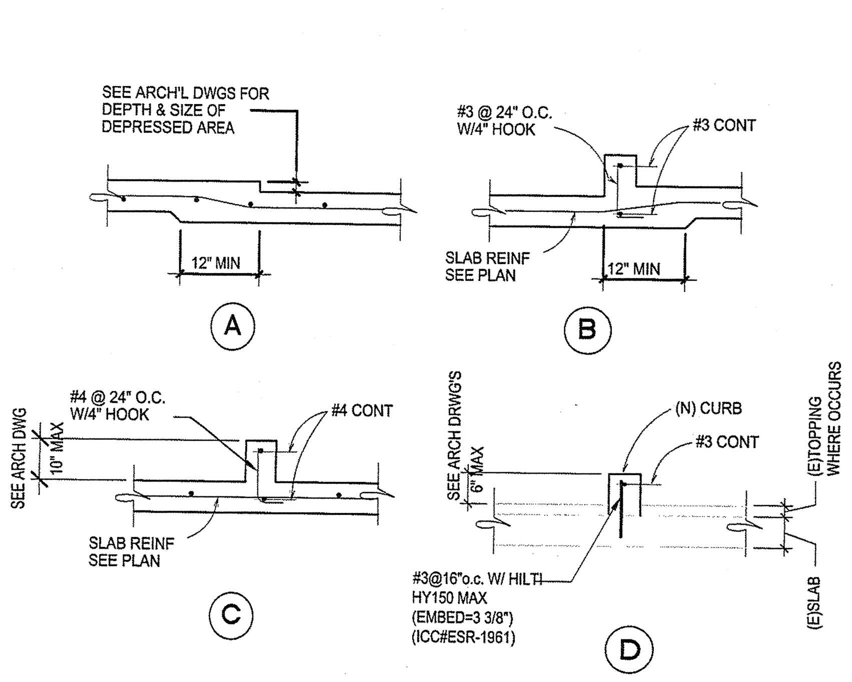

17 DEPRESSED SLAB AND CONC CURB
N/A

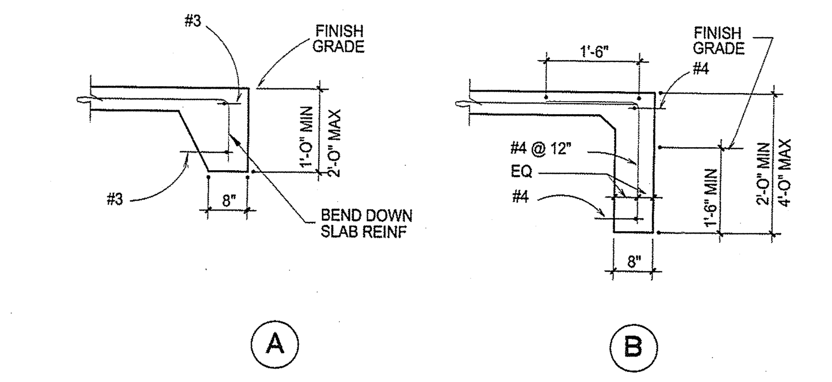

13 SLAB EDGE
N/A

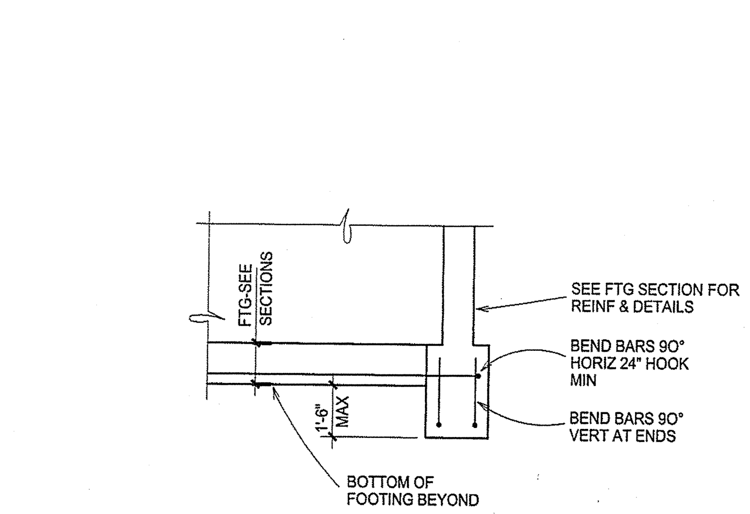

9 STEPPED FOOTING @ CORNER
N/A

NOTES:
1. ALLOW 7 DAYS BETWEEN ADJACENT POURS
2. DO NOT PROVIDE SAWCUT JOINTS.
3. REF. PLAN FOR SUGGESTED CONSTRUCTION JOINT LOCATIONS

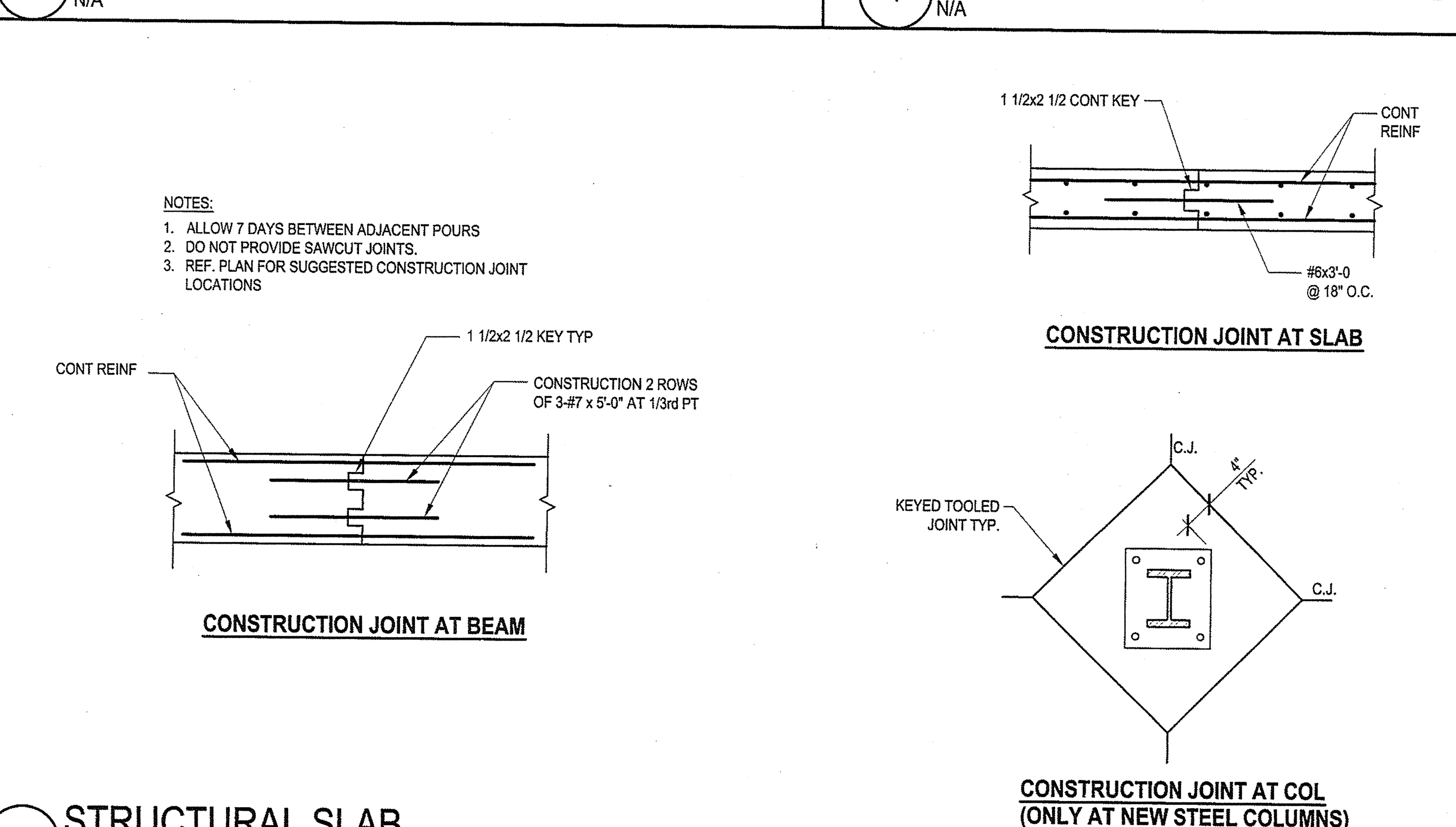

2 STRUCTURAL SLAB
N/A

SCHEDULE

CLASS A SPLICE (DEVELOPMENT) LENGTHS									
CONCRETE	BAR SIZE	#4	#5	#6	#7	#8	#9	#10	#11
fc=3000	TOP BAR	28	36	43	62	71	80	90	100
HARD ROCK	OTHER BAR	22	27	33	48	55	62	70	77
CONCRETE	BAR SIZE	#4	#5	#6	#7	#8	#9	#10	#11
fc=3000	TOP BAR	37	46	56	81	92	104	118	131
LT WT	OTHER BAR	28	36	43	62	71	80	90	100
CONCRETE	BAR SIZE	#4	#5	#6	#7	#8	#9	#10	#11
fc=4000	TOP BAR	25	31	37	54	62	70	78	87
HARD ROCK	OTHER BAR	19	24	28	42	47	54	60	67
CLASS B SPLICE LENGTHS									
CONCRETE	BAR SIZE	#4	#5	#6	#7	#8	#9	#10	#11
fc=3000	TOP BAR	37	46	56	81	93	104	118	131
HARD ROCK	OTHER BAR	28	36	43	62	71	80	90	100
CONCRETE	BAR SIZE	#4	#5	#6	#7	#8	#9	#10	#11
fc=3000	TOP BAR	48	60	72	105	120	136	153	170
LT WT	OTHER BAR	37	46	56	81	92	104	118	131
CONCRETE	BAR SIZE	#4	#5	#6	#7	#8	#9	#10	#11
fc=4000	TOP BAR	32	40	48	70	80	90	102	113
HARD ROCK	OTHER BAR	25	31	37	54	62	70	78	87

NOTES:
1. TOP BARS AR HORIZONTAL BARS WITH MORE THAN 12" OF CONCRETE BELOW THEM.
2. WALL BARS ARE NOT CONSIDERED TOP BARS.
3. USE CLASS B SPLICES TYPICALLY U.N.O.
4. ALL LENGTHS ARE IN INCHES.
5. REF. ACI318-95 CHAPTER 12 SECTIONS 12.2 & 12.15.

14 REINFORCING BAR SPLICE SCHEDULE
N/A

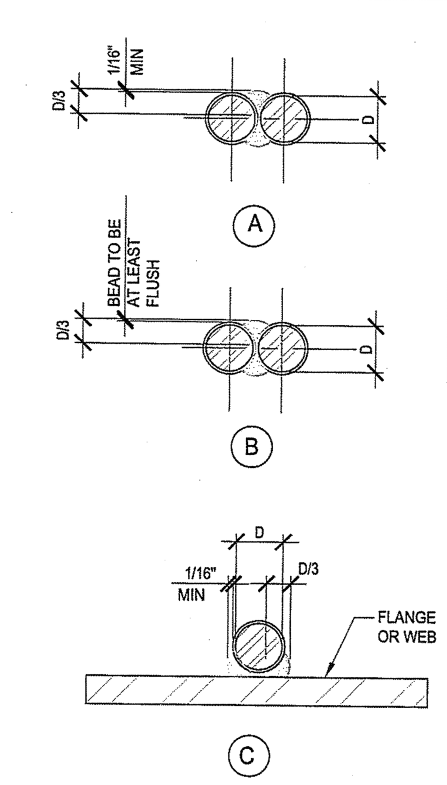

SCHEDULE

MIN. WELD REQUIREMENT FOR LAP WELDING		
BAR # IN 1/8"	WELD DIAGRAM	WELD LENGTH (EA SIDE)
#2	A	2"
#3	A	2"
#4	C	2 1/2"
#5		3"
#6	B	3 1/2"
#7		4"

1. #8 BAR & LARGER SHALL BE C.P. BUTT WELDED.
2. NO WELDING WITHIN 1" OF BEGINNING OF BAR BEND.
3. SEE GENERAL NOTES & REINF STEEL NOTES.

10 REINFORCING WELD SPLICE
N/A

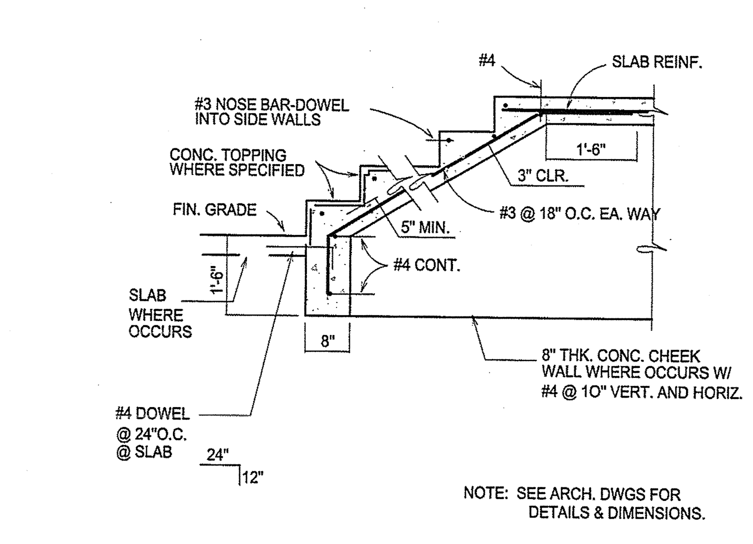

6 CONCRETE STAIR ON GRADE
N/A

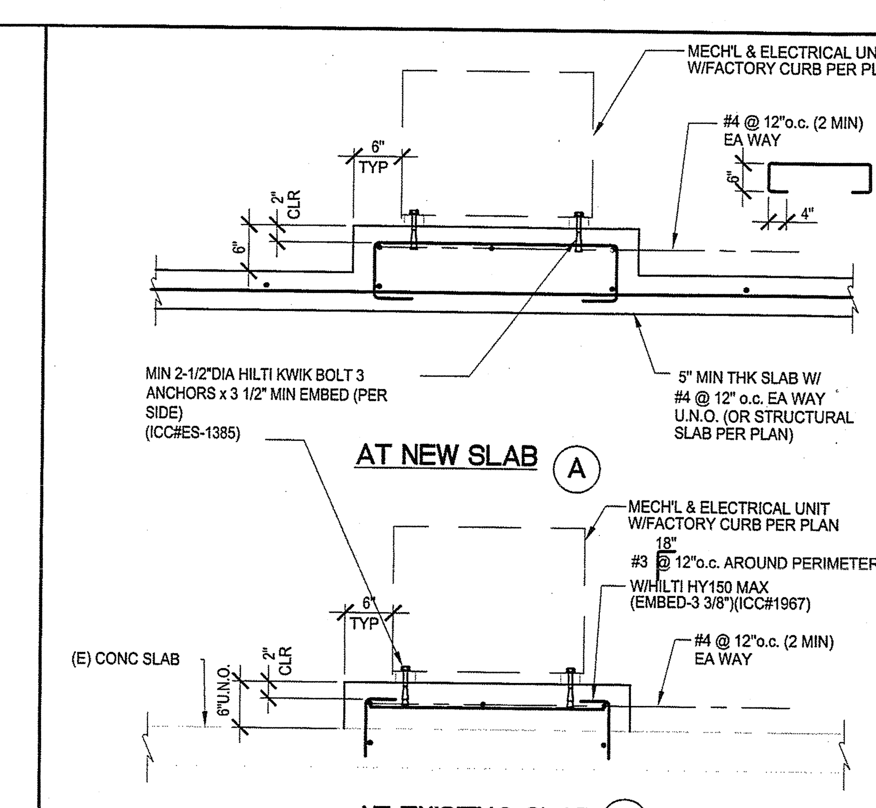

3 CONCRETE ISLAND
N/A

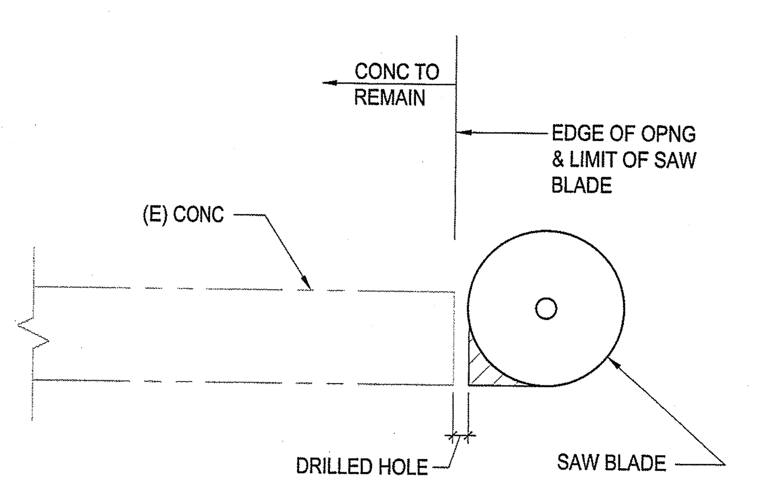

18 DETAIL
N/A

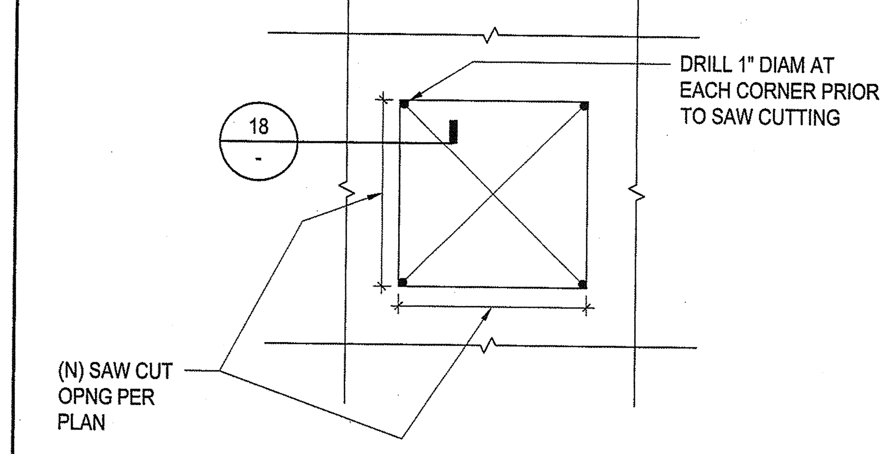

NOTE:
DO NOT OVERCUT (E) SLAB OR WALL FOR NEW OPENINGS.

15 TYPICAL(N)OPN'G AT CONC SLAB OR WALL
N/A

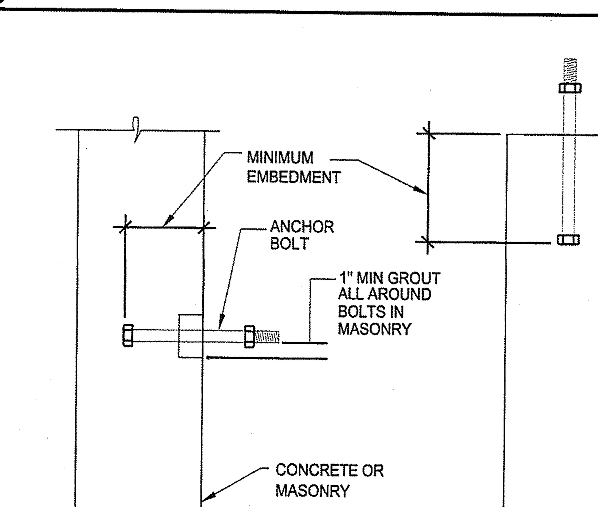

BOLT EMBED SCHEDULE		
BOLT SIZE	BOLT EMBEDMENT HORIZ	VERT
1/2"	4"	8"
5/8"	5"	9"
3/4"	6"	11"

NOTE:
ANCHOR BOLTS SHALL BE HEX HEADED BOLTS CONFORMING TO ASTM A307.
HEX HEAD TO CONFORM ANSI/ASME B18-2-1.

11 BOLT EMBEDMENT SCHEDULE
N/A

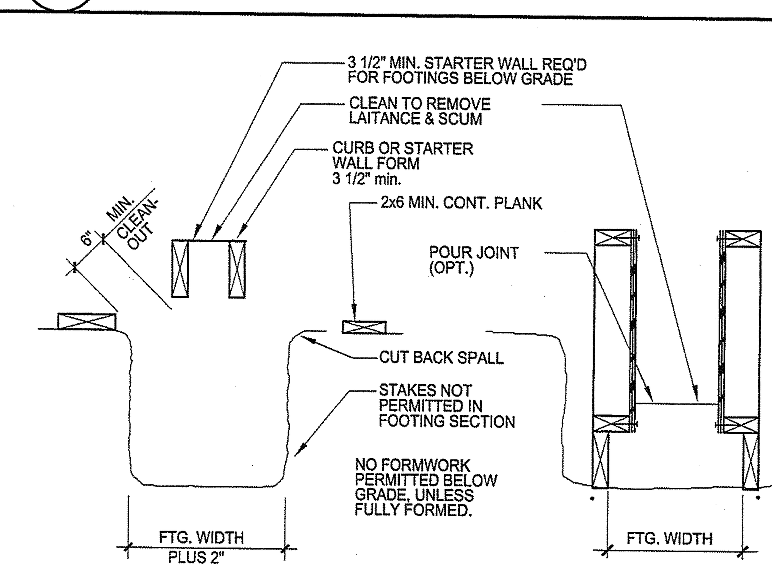

NOTES:
1. UNFORMED FOOTING DETAIL MAY BE USED PROVIDED TRENCH IS STABLE & APPROVED BY STRUCTURAL ENGINEER.
2. STARTER WALL IS REQ'D FOR ALL MASONRY & CONC. WALLS.
3. SOLID FORM LUMBER MAY BE USED IN UNEXPOSED CONSTRUCTION IF IN GOOD SOUND CONDITION.
4. ALL ANCHOR BOLTS, REINFORCING, INSERTS, ETC. TO BE FIRMLY TIED IN PLACE PRIOR TO PLACING CONCRETE.

7 FORMS FOR FOUNDATION
N/A

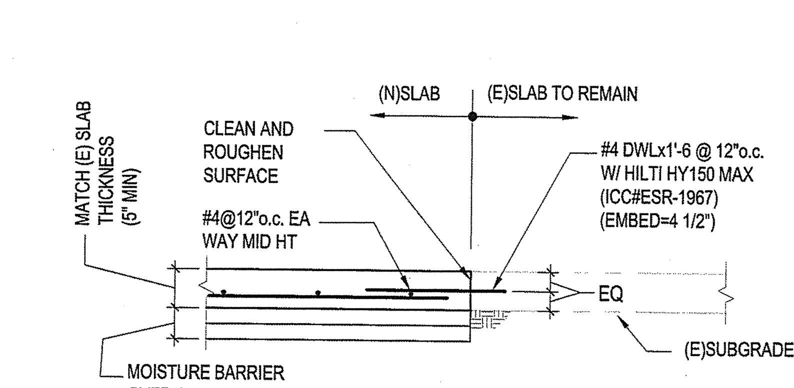

4 TYPICAL (N)SLAB TO (E)SLAB
N/A

SADDLEBACK COLLEGE

gkkworks
2355 Main Street Suite 220
Irvine | CA 92614
949 250 1500
949 955 2708 fax

Architect Seal

LICENSED ARCHITECT MATTHEW S. GREINER NO. C27137 REN. 10-31-09 STATE OF CALIFORNIA

Consultant and Seal

Thornton Tomasetti
Thornton Tomasetti, Inc.
2415 Campus Drive, Suite 110
Irvine CA 92612-8530
T 949.271.3300 F 949.271.3301
JOB# GG7524.00

REGISTERED PROFESSIONAL ENGINEER No. S-... Exp. 9-30-08 STRUCTURAL STATE OF CALIFORNIA

Agency Approval

IDENTIFICATION STAMP
DIV. OF THE STATE ARCHITECT
APPL. #04-109129
AC ___ FLS ___ SS TB
DATE MAY 0 7 2008

No.	Date	Revision/Issue

Project Name
JAMES B. UTT MEMORIAL LEARNING RESOURCE CENTER RENOVATION
28000 Marguerite Parkway
Mission Viejo, California 92692

Checked By DT | Drawn By MG

Sheet Title
TYPICAL DETAILS

Sheet Number
S 1.2

Project Number GG7524.00 | Scale 3/4"=1'-0"

© 2007 gkkworks, All Rights Reserved
NO PART OF THE CONTENTS OF THIS DOCUMENT MAY BE REPRODUCED OR TRANSMITTED IN ANY FORM OR BY ANY MEANS WITHOUT THE WRITTEN PERMISSION OF GKKWORKS.

P:\CA1\PROJECTS\GG7524.00 - REMODEL-JAMES B. UTT LIBRARY BUILDING\DRAWINGS\STRUCT\CURRENT\S1-2.DWG - PLOTTED BY Garcia, Margarito - ON - 14-Apr-08