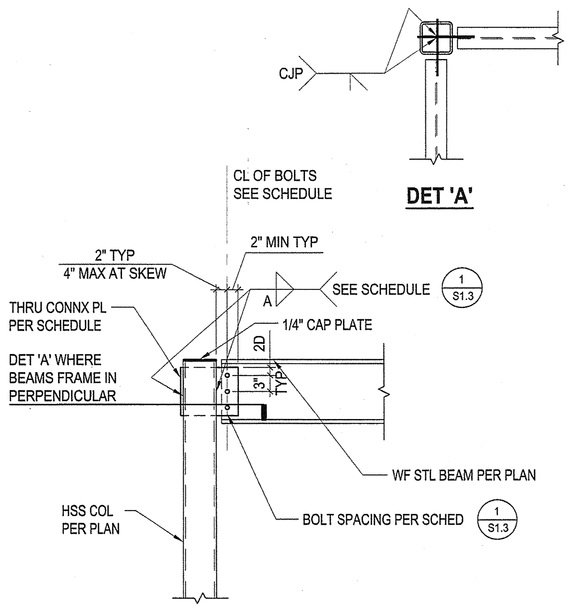

10 TYPICAL ONE SIDED BEAM TO HSS COLUMN CONNECTION
N/A

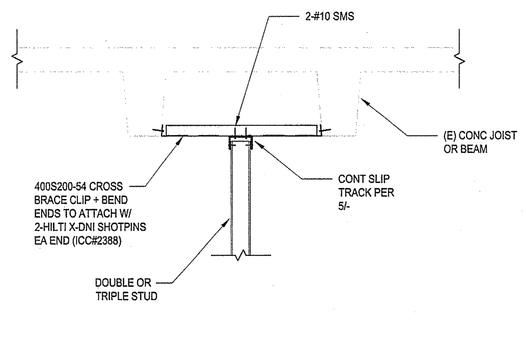

7 CROSS BRACE
N/A

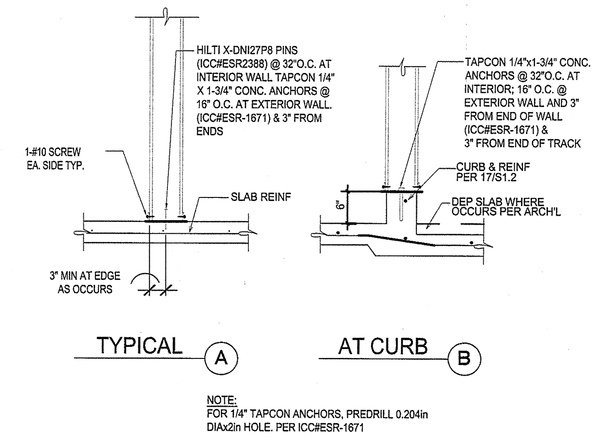

4 NON-BEARING TRACK ANCHORAGE
N/A

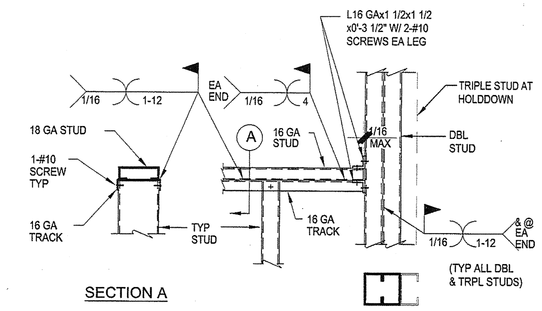

1 SILL DETAIL (8'-6" MAX)
N/A

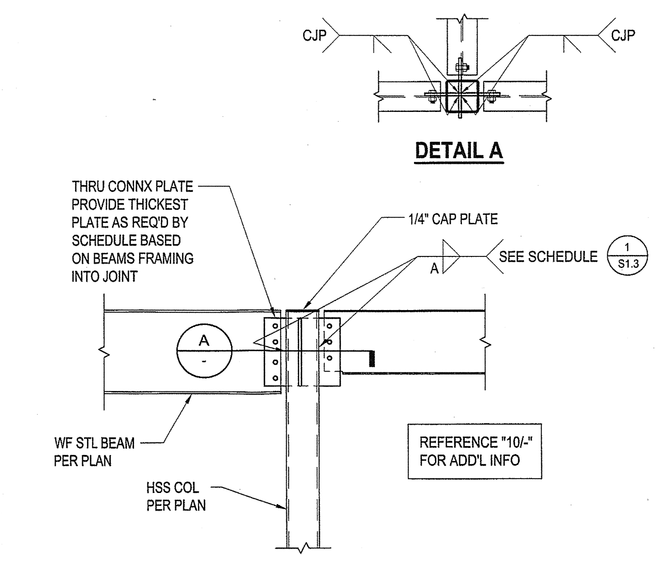

11 TYPICAL TWO SIDED BEAM TO HSS COLUMN CONNECTION
N/A

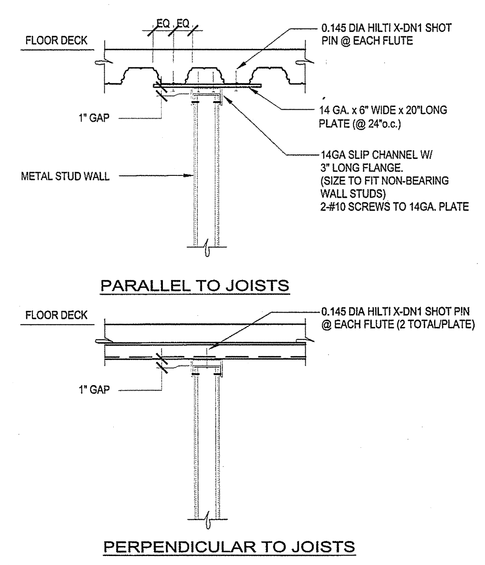

8 NON BEARING WALL BRACE TO FLOOR DECK
N/A

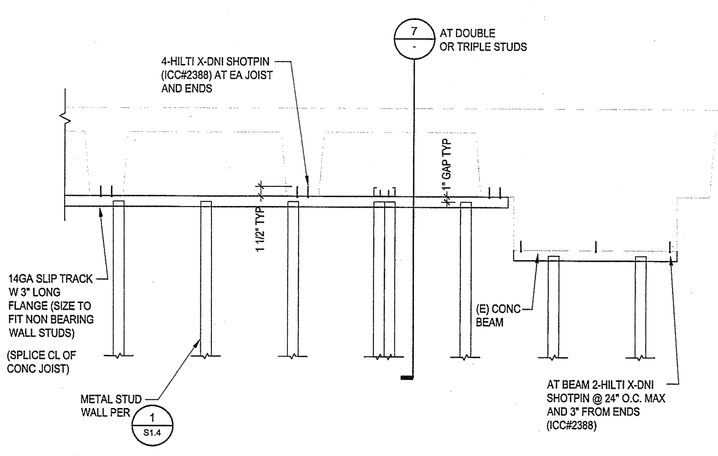

5 NON BEARING WALL TO (E) CONC
N/A

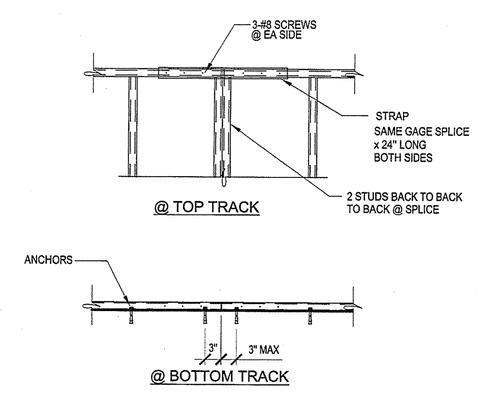

2 TRACK SPLICE DETAIL
N/A

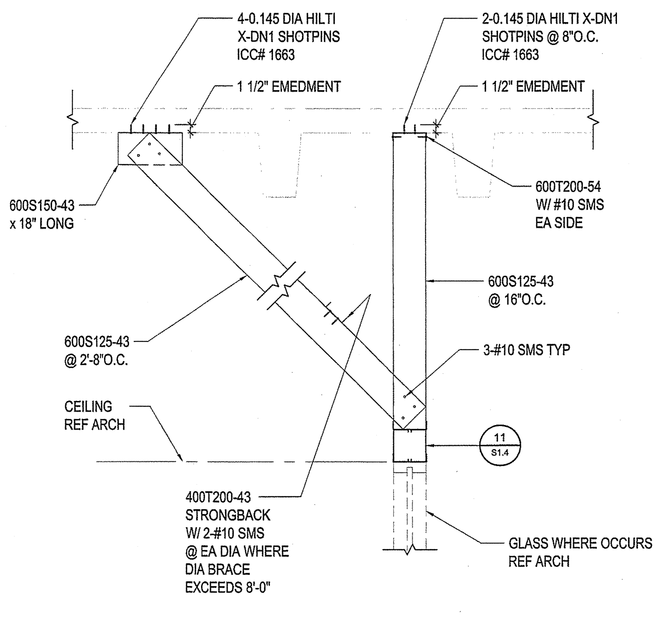

12 DETAIL
N/A

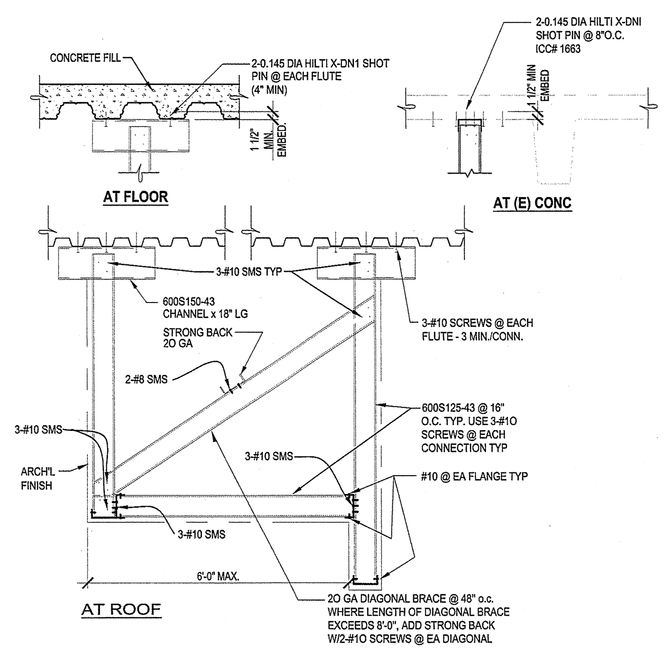

9 TYPICAL SOFFIT DETAIL
N/A

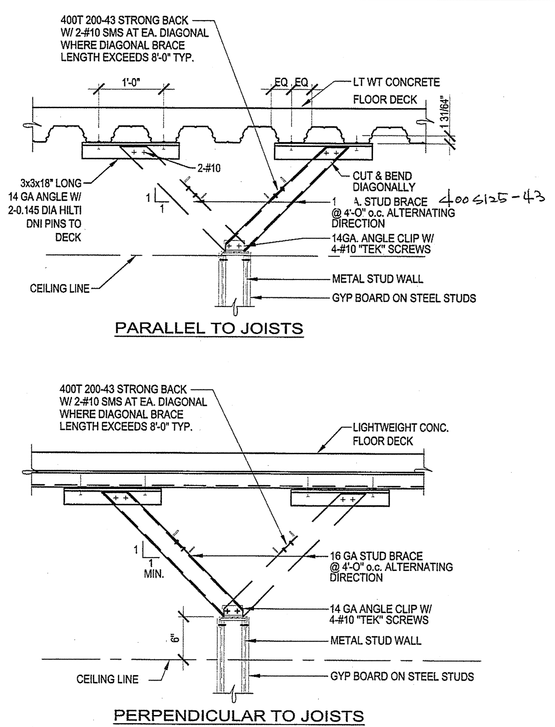

6 NON BEARING WALL BRACE TO FLOOR DECK
N/A

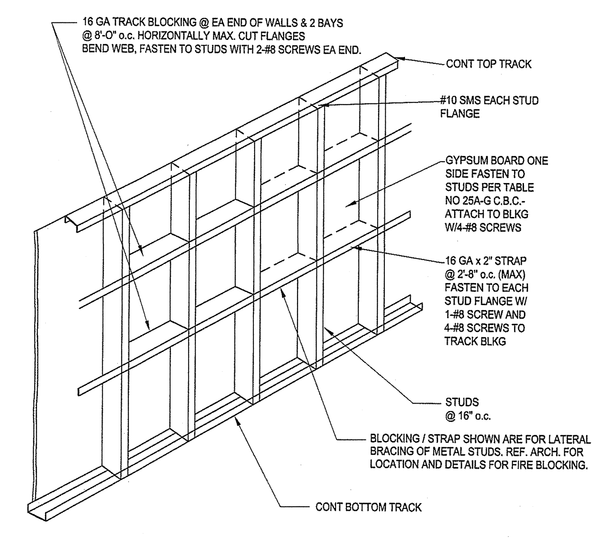

(WALL COVERED ONE-SIDE)

3 WALL BLOCKING SECTION AT ONE SIDED COVER
N/A

SADDLEBACK COLLEGE

gkkworks
2355 Main Street Suite 220
Irvine | CA 92614
949 250 1500
949 955 2708 fax

Architect Seal

LICENSED ARCHITECT
MATTHEW S. GREINER
NO. C27137
REN: 10-31-09
STATE OF CALIFORNIA

Consultant and Seal

Thornton Tomasetti
Thornton Tomasetti, Inc.
2418 Campus Drive, Suite 110
Irvine CA 926112-8530
T 949.271.3300 F 949.271.3301
JOB# GG7524.00

REGISTERED PROFESSIONAL ENGINEER
JAY-KEUN PARK
No. S-4029
Exp. 1-30-09
STRUCTURAL
STATE OF CALIFORNIA

Agency Approval

IDENTIFICATION STAMP
DIV. OF THE STATE ARCHITECT
APPL. # 04-109129
AC____ FLS____ SS JB
DATE MAY 07 2008

No.	Date	Revision/Issue

Project Name

JAMES B. UTT MEMORIAL
LEARNING RESOURCE CENTER
RENOVATION
28000 Marguerite Parkway
Mission Viejo, California 92692

Checked By	Drawn By
DT	MG

Sheet Title

TYPICAL
DETAILS

Sheet Number

S1.5

Project Number	Scale
GG7524.00	3/4"=1'-0"

© 2007 gkkworks, All Rights Reserved
NO PART OF THE CONTENTS OF THIS DOCUMENT MAY BE REPRODUCED OR TRANSMITTED IN ANY FORM OR BY ANY MEANS WITHOUT THE WRITTEN PERMISSION OF GKKWORKS.

DR331777-51697 P1 S2 - R.C CONSTRUCTION SERVICES - PG 133 OF 235 (P1 S2) SET.TIF - 2/3/2010 - 15:34
P:\GKA\PROJECTS\GG7524.00 - RSH\DOCS_JAMES B. UTT LIBRARY BUILDING\DRAWINGS\STRUCTURAL\RSH-S1.5.DWG - PLOTTED BY Garcia, Margarita - ON - 14-Apr-08