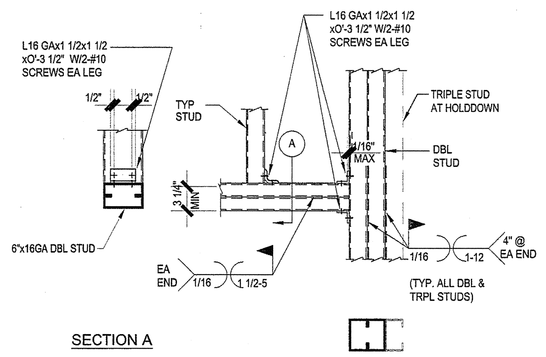

SECTION A

10 LINTEL DETAIL (4' -6" MAX)
N/A

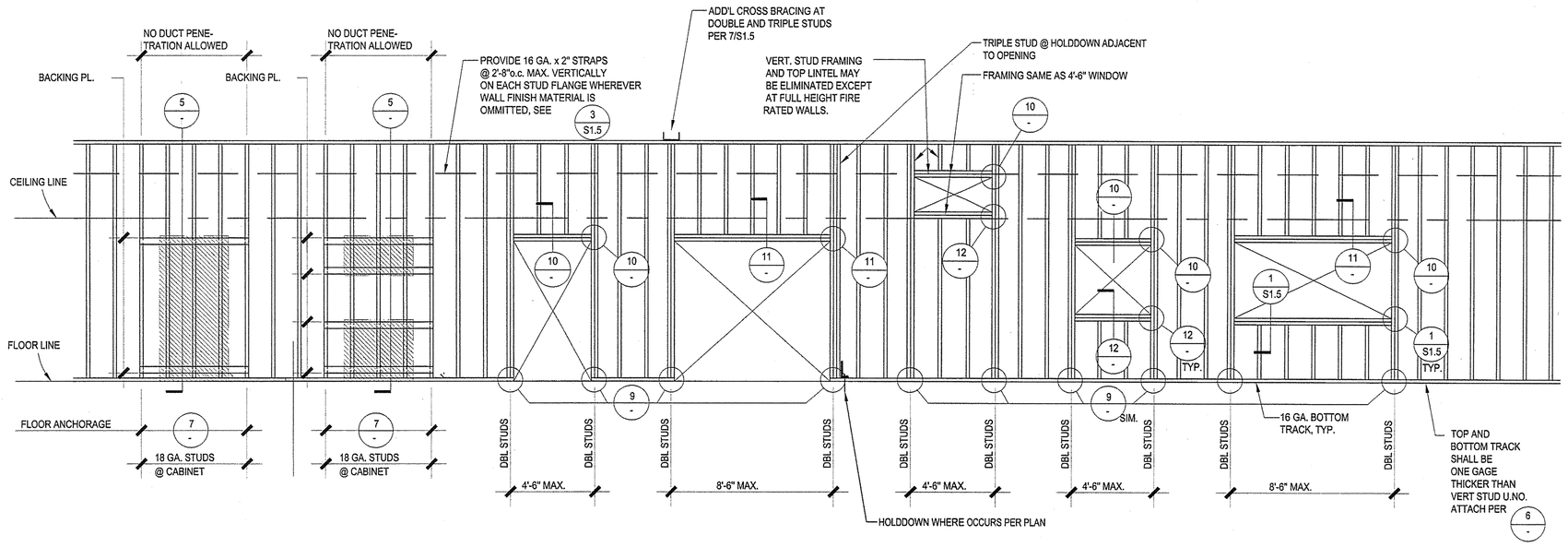

NOTE:

1. FOR INTERIOR NON-BEARING WALLS USE 600S125-33 GA @ 16" O.C. (MAX.) W/ 18 GA TRACK U.N.O.

   FOR EXTERIOR NON-BEARING WALLS REF PLAN AND SECTIONS FOR REQUIRED SIZE.
2. ALL STUDS SHALL BE "S" STUDS WITH FLANGE STIFFENERS AT OPEN SIDE.
3. DENOTES SHELVES OR CABINETRY.
4. IN NO CASE SHALL DOUBLE STUDS AT SIDES OF OPENINGS BE CUT FOR DUCTWORK OR OTHER MECHANICAL SYSTEMS.
5. SEE DETAIL 14/- FOR TOP & BOTTOM TRACK SPLICE DETAIL.
6. SEE DETAIL 6/- FOR STUD ATTACHMENT TO TRACK
7. WHERE STUD TRACK SITS ON NON-STRUCTURAL FLOOR MATERIAL SUCH AS TILE, MARBLE, ETC., USE 3/8" DIA HILTI KWIK BOLTS WITH 3" EMBEDMENT IN LIEU OF DN PINS. (ONE FOR ONE SUBSTITUTION).
8. WHEN INSTALLING DRILLED-IN ANCHORS AND/OR POWDER DRIVEN PINS IN EXISTING NON-PRESTRESSED REINFORCED CONCRETE, USE CARE AND CAUTION TO AVOID CUTTING OR DAMAGING THE EXISTING REINFORCING BARS. MAINTAIN A MINIMUM CLEARANCE OF ONE INCH BETWEEN THE REINFORCEMENT AND THE DRILLED-IN ANCHOR AND/OR PIN.
9. ALL DBL & TRIPLE STUDS TO BE WELDED

1 TYPICAL METAL STUD WALL FRAMING ELEVATION WITH MAX 8'-6" OPENING
N/A

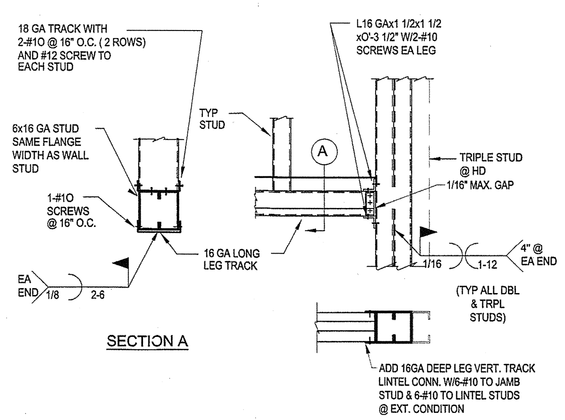

SECTION A

11 LINTEL DETAIL (8'-6" MAX)
N/A

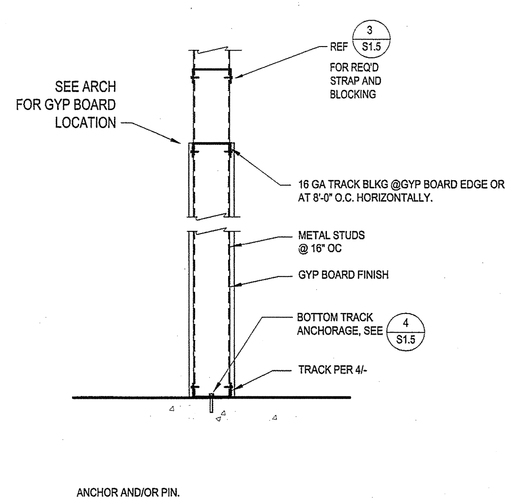

8 WALL BLOCKING SECTION
N/A

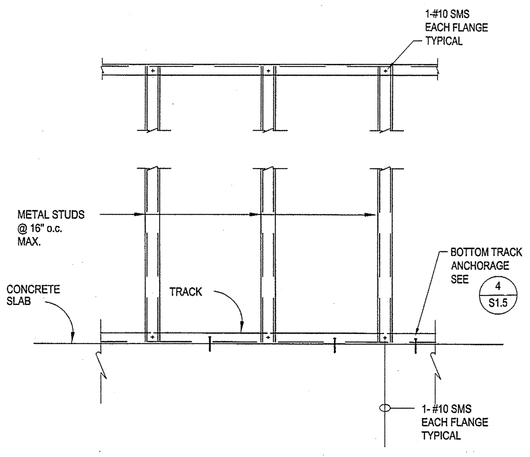

6 TYP TRACK ATTACHMENT AND ANCHORAGE
N/A

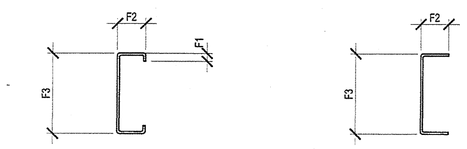

TYPICAL 'S' SECTION TYPICAL 'T' SECTION

MINIMUM SECTION PROPERTIES							
MEMBER	A	I_{xx}	S	F1 (in)	F2 (in)	F3 (in)	*MAX HT.
362S125-43	0.272	0.498	0.284	0.188	1.25	3.625	14'-9
362S125-54	0.337	0.608	0.348	0.188	1.25	3.625	15'-9
362S125-68	0.417	0.739	0.422	0.188	1.25	3.625	16'-10
400S125-43	0.295	0.682	0.341	0.188	1.25	4	16'-5
400S125-54	0.365	0.835	0.418	0.188	1.25	4	17-6
600S125-33	0.297	1.409	0.47	0.188	1.25	6	20'-10
600S125-43	0.385	1.817	0.606	0.188	1.25	6	22'-9
362T200-43	0.343	0.808	0.427	—	2	3.625	—
362T200-54	0.431	1.024	0.536	—	2	3.625	—
362T200-68	0.543	1.307	0.675	—	2	3.625	—
400T200-43	0.360	1.002	0.482	—	2	4	—
400T200-54	0.452	1.268	0.604	—	2	4	—
600T200-43	0.451	2.494	0.809	—	2	6	—
600T200-54	0.565	3.145	1.015	—	2	6	—

*DESIGN BASED ON 5 PSF FOR INTERIOR NON-LOAD BEARING STUDS AT 16" O.C.

4 STUD PROPERTIES
N/A

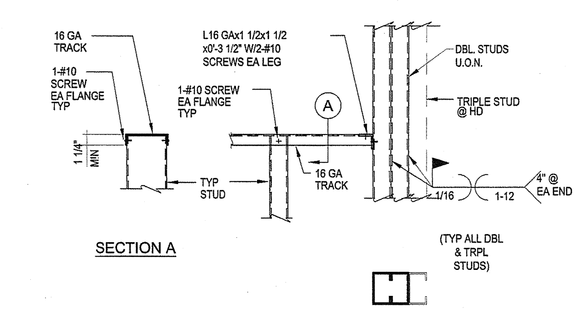

SECTION A

12 SILL DETAIL (4'-6" MAX)
N/A

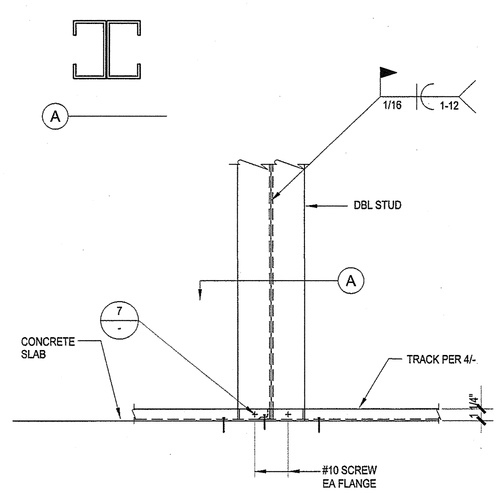

9 BOTTOM TRACK ANCHORAGE AT DOUBLE STUD
N/A

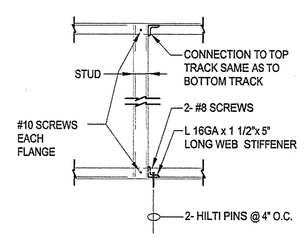

7 STUD ATTACHMENT AT CABINET
N/A

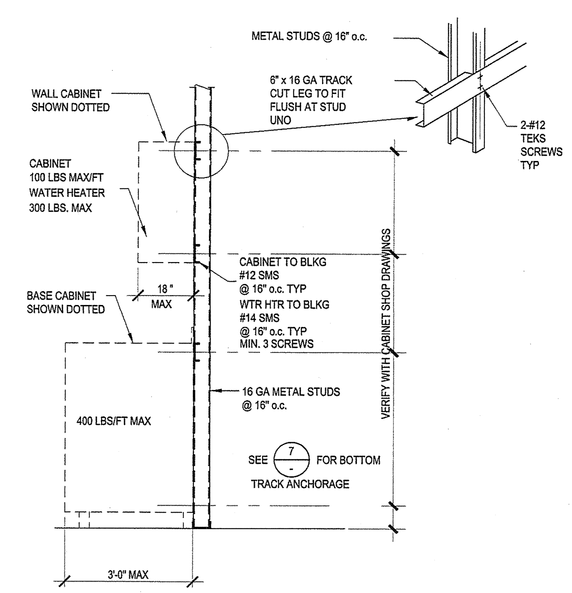

5 TYPICAL CABINET SHELVING BACKING
N/A

SADDLEBACK COLLEGE

gkkworks
2355 Main Street Suite 220
Irvine | CA 92614
949 250 1500
949 955 2708 fax

Architect Seal

LICENSED ARCHITECT
MATTHEW S. GREINER
NO. C27137
REN. 10-31-09
STATE OF CALIFORNIA

Consultant and Seal

Thornton Tomasetti
Thornton Tomasetti, Inc.
2415 Campus Drive, Suite 110
Irvine CA 92612-8520
T 949.271.3300 F 949.271.

JOB# GG7524.00

REGISTERED PROFESSIONAL ENGINEER
S. 34029
Exp. 9-30-09
STRUCTURAL
STATE OF CALIFORNIA

Agency Approval

IDENTIFICATION STAMP
DIV. OF THE STATE ARCHITECT
APPL. # 04-109129
AC_____ FLS_____ SS TB
DATE MAY 07 2008

No.	Date	Revision/Issue

Project Name

JAMES B. UTT MEMORIAL
LEARNING RESOURCE CENTER
RENOVATION

28000 Marguerite Parkway
Mission Viejo, California 92692

Checked By	Drawn By
DT	MG

Sheet Title

TYPICAL
DETAILS

Sheet Number

S1.4

Project Number	Scale
GG7524.00	3/4"=1'-0"

© 2007 gkkworks, All Rights Reserved
NO PART OF THE CONTENTS OF THIS DOCUMENT MAY BE REPRODUCED OR TRANSMITTED IN ANY FORM OR BY ANY MEANS WITHOUT THE WRITTEN PERMISSION OF GKKWORKS.

P:\CAD\PROJECTS\GG7524.00 - REMODEL JAMES B. UTT LIBRARY BUILDING\DRAWINGS\DESTRUCTION\REBID\TS1-4.DWG - PLOTTED BY Garcia, Marguerite - On - 14-Apr-08

OR331777-51697 P1 S2 - R C CONSTRUCTION SERVICES - PG 132 OF 235 (P1 S2) 1 SET.TIF - 23/2010 - 15:34