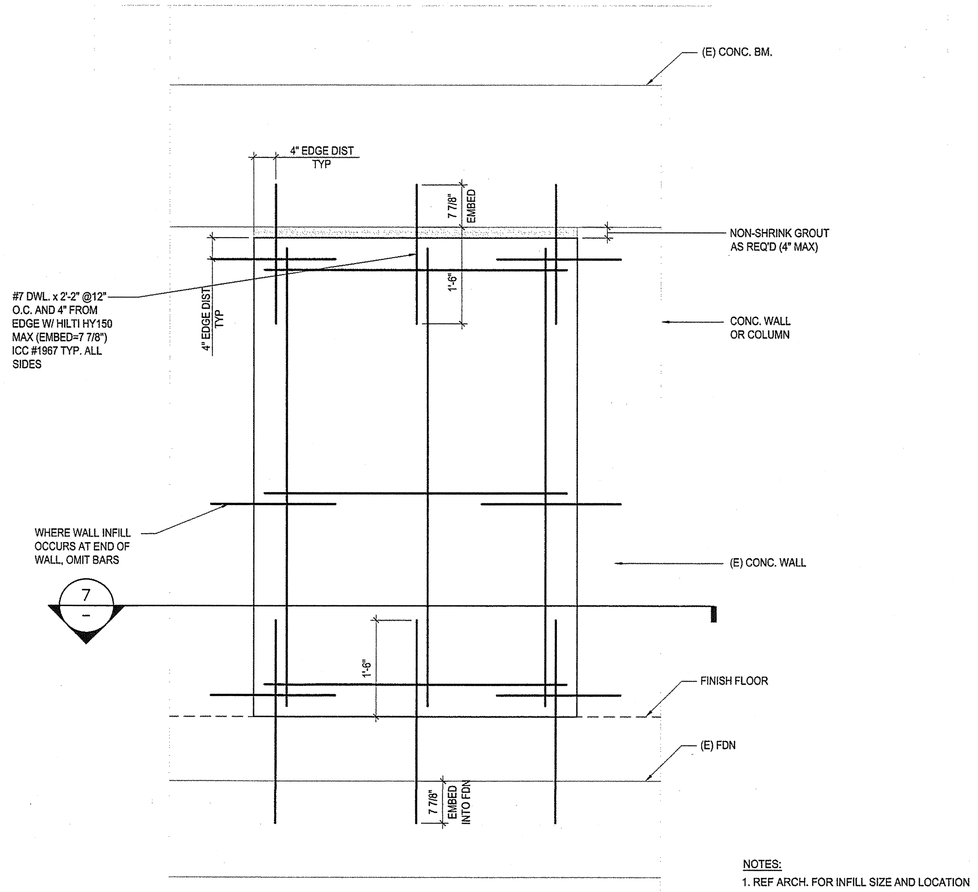

NOTES:
1. REF ARCH. FOR INFILL SIZE AND LOCATION

6 TYPICAL CONC. WALL INFILL (ELEVATION)

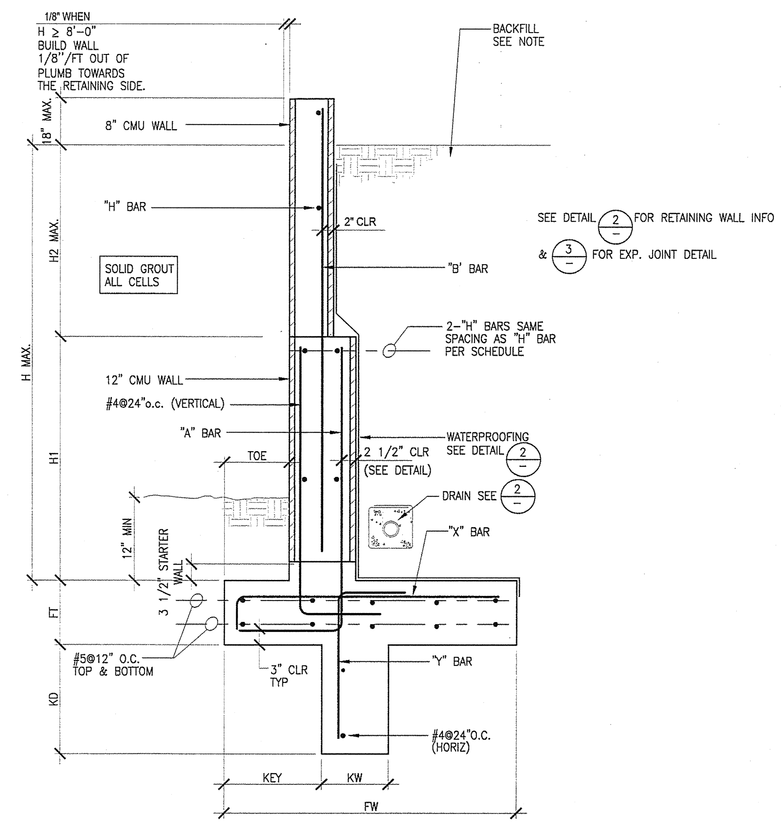

SEE DETAIL 2 FOR RETAINING WALL INFO
& 3 FOR EXP. JOINT DETAIL

RETAINING WALL SCHEDULE															
H max.	H1	H2 max.	FT	FW	TOE	KD	KW	KEY	"X" BAR	"Y" BAR	"A" BAR	"B" BAR	"H" BAR	SPECIAL INSP.
8'-0"	3'-0"	5'-0"	1'-6"	6'-6"	2'-0"	2'-0"	1'-0"	2'-0"	#5@12"o.c.	#5@16"o.c.	#5@8"o.c.	#5@16"o.c.	#4@24"o.c.	YES

1 SITE RETAINING WALL (CMU)

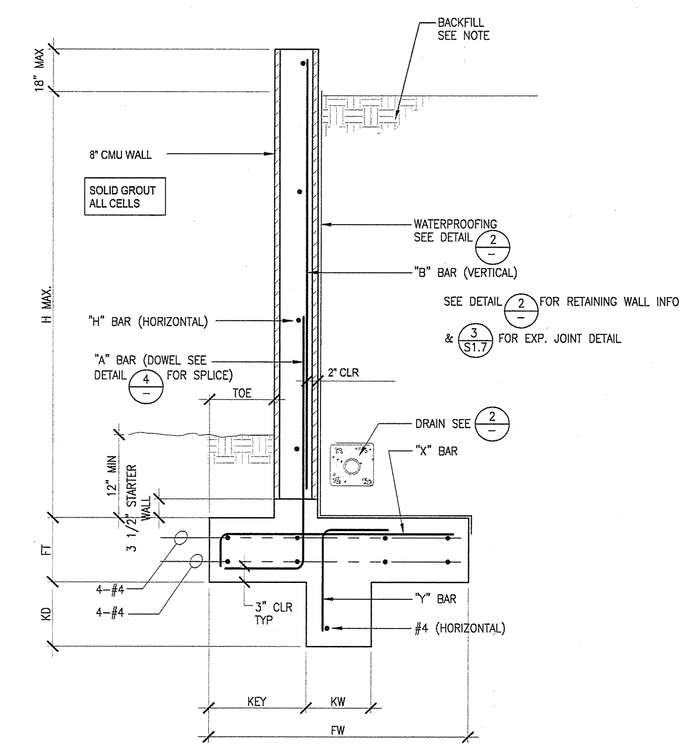

RETAINING WALL SCHEDULE														
H max.	FT	FW	TOE	KD	KW	KEY	"X" BAR	"Y" BAR	"A" BAR	"B" BAR	"H" BAR	SPECIAL INSP.
4'-6"	1'-0"	3'-6"	1'-0"	1'-0"	1'-0"	1'-0"	#4@12"o.c.	#4@12"o.c.	#5@16"o.c.	#5@16"o.c.	#4@24"o.c.	YES

NOTE: SEE DETAIL 1/S1.2 @ STEP FTG.

2 RETAINING WALL BACKFILL

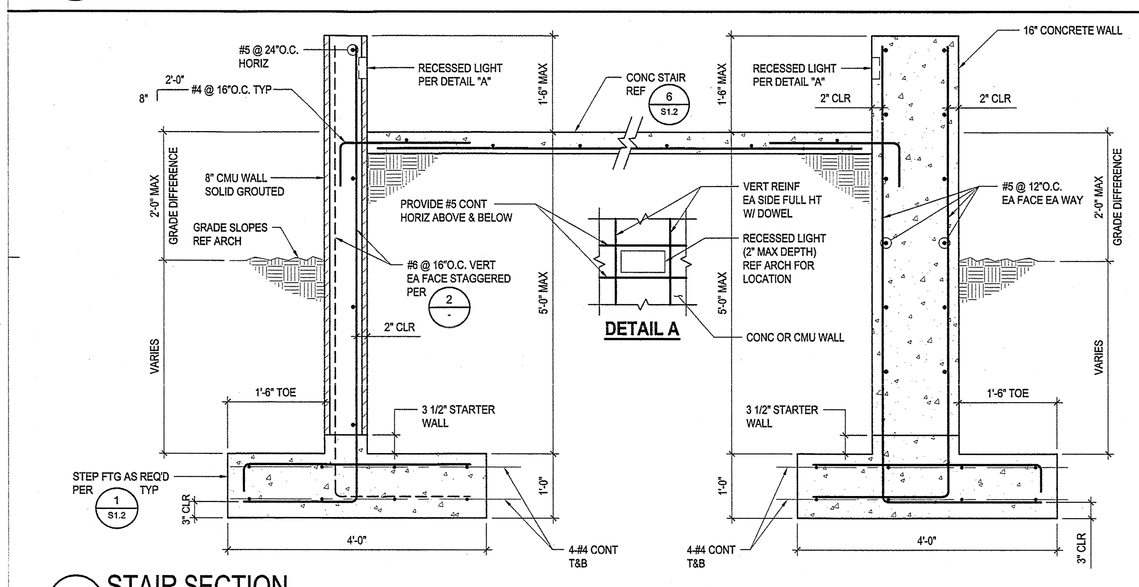

8 STAIR SECTION

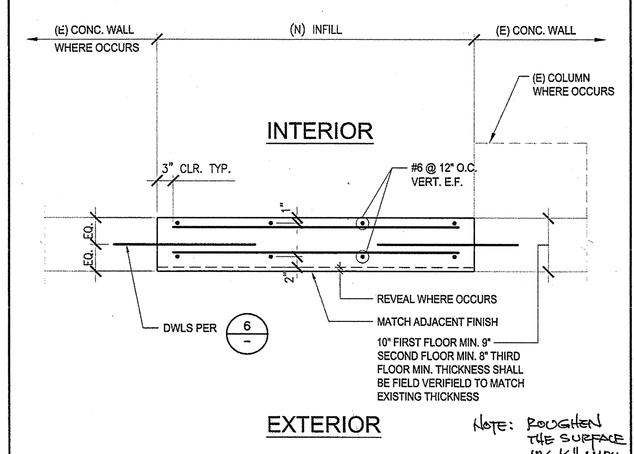

NOTE: ROUGHEN THE SURFACE W/ 1/8" ALUM. TUBE. TYP @ ALL (N) SAWCUT SURFACE.

7 TYPIAL CONC. WALL INFILL

LAP SCHEDULE	
REBAR SIZE (GR 60)	LAP LENGTH
#4	24"
#5	30"
#6	36"
#7	42"
#8	48"

NOTES:
1. ALL VERTICAL REINFORCING FOR COLUMNS, PIERS AND WALLS SHALL BE DOWELED AS SHOWN EXCEPT SPECIFIC DETAILS OF DRAWINGS SHALL GOVERN IN CASES OF CONFLICT.
2. DOWELS SHALL BE THE SAME GRADE, SIZE AND NUMBER AS VERTICAL REINF.

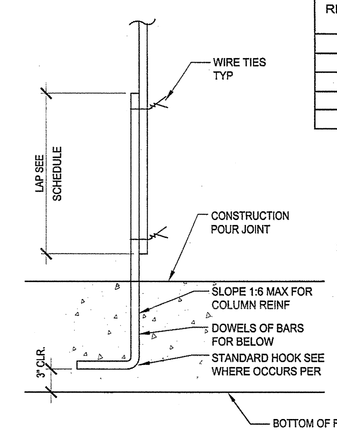

4 DOWELS AT CMU WALL

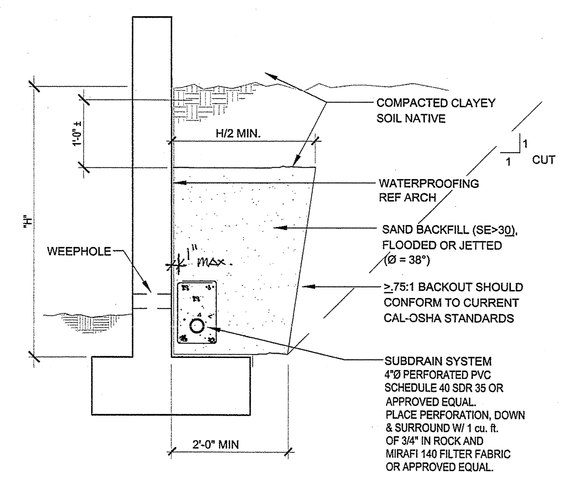

2 RETAINING WALL BACKFILL

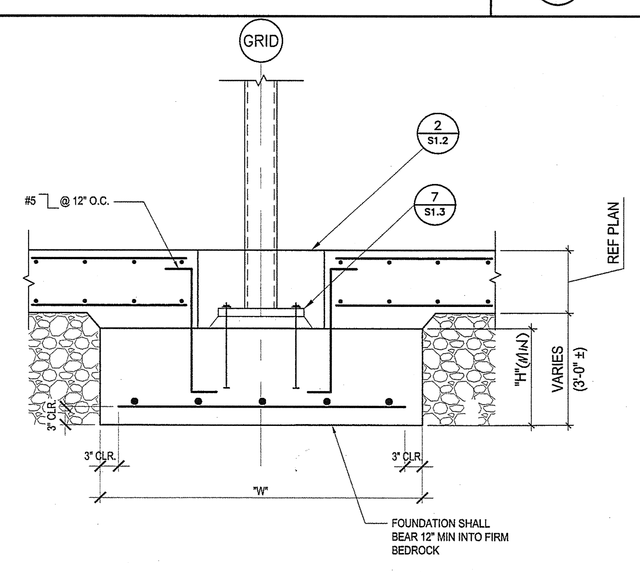

FOOTING SCHEDULE			
MARK	PAD FOOTING		REINFORCING
	W	H	
F4	4'-0" SQ	16"	4-#5 EACH WAY
F6	6'-0" SQ	18"	6-#6 EACH WAY

5 TYPICAL FOUNDATION

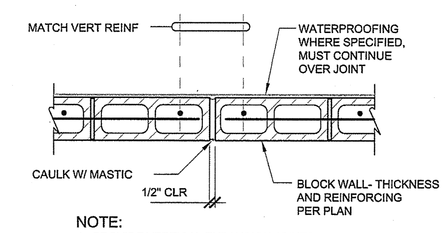

NOTE:
1. PROVIDE VERTICAL EXPANSION JOINTS IN WALL AT 24'-0"o.c. MAX U.N.O. ON PLANS.
2. ALL HORIZONTAL REINFORCEMENT MUST STOP AT 2" FROM JOINT TYP BOTH SIDES.

PLAN VIEW

3 TYP EXPANSION JOINT DETAIL FOR CONCRETE OR MASONRY

SADDLEBACK COLLEGE

gkkworks
2355 Main Street Suite 220
Irvine | CA 92614
949 250 1500
949 955 2708 fax

Architect Seal

LICENSED ARCHITECT MATTHEW S. GREINER NO. C27137 REN: 12-31-09 STATE OF CALIFORNIA

Consultant and Seal

Thornton Tomasetti
Thornton Tomasetti, Inc.
2415 Campus Drive, Suite 110
Irvine CA 926112-8530
T 949.271.3300 F 949.271.

JOB# GG7524.00

REGISTERED PROFESSIONAL ENGINEER No. S 04029 Exp. 12-31-08 STRUCTURAL STATE OF CALIFORNIA

Agency Approval

IDENTIFICATION STAMP
DIV. OF THE STATE ARCHITECT
APPL. # 04-109129
AC.____ FLS.____ SS. TB
DATE MAY 07 2008

No.	Date	Revision/Issue

Project Name

JAMES B. UTT MEMORIAL LEARNING RESOURCE CENTER RENOVATION
28000 Marguerite Parkway
Mission Viejo, California 92692

Checked By DT | Drawn By MG

Sheet Title

TYPICAL DETAILS

Sheet Number

S1.7

Project Number GG7524.00 | Scale 3/4"=1'-0"

© 2007 gkkworks, All Rights Reserved
NO PART OF THE CONTENTS OF THIS DOCUMENT MAY BE REPRODUCED OR TRANSMITTED IN ANY FORM OR BY ANY MEANS WITHOUT THE WRITTEN PERMISSION OF GKKWORKS.

OR331777-51697 P1 S2 - R C CONSTRUCTION SERVICES - PG 135 OF 235 (P1 S2) | SET: TIF - 2/3/2010 - 15:34
P:\GKKPROJECTS\GGG7524.00 - REDROCK\JAMES B. UTT LIBRARY BUILDING\DRAWING\CONSTRUCTION\DRAFTING\1-7.DWG - PLOTTED BY Gavin, Margolin - GN - 14-Apr-08