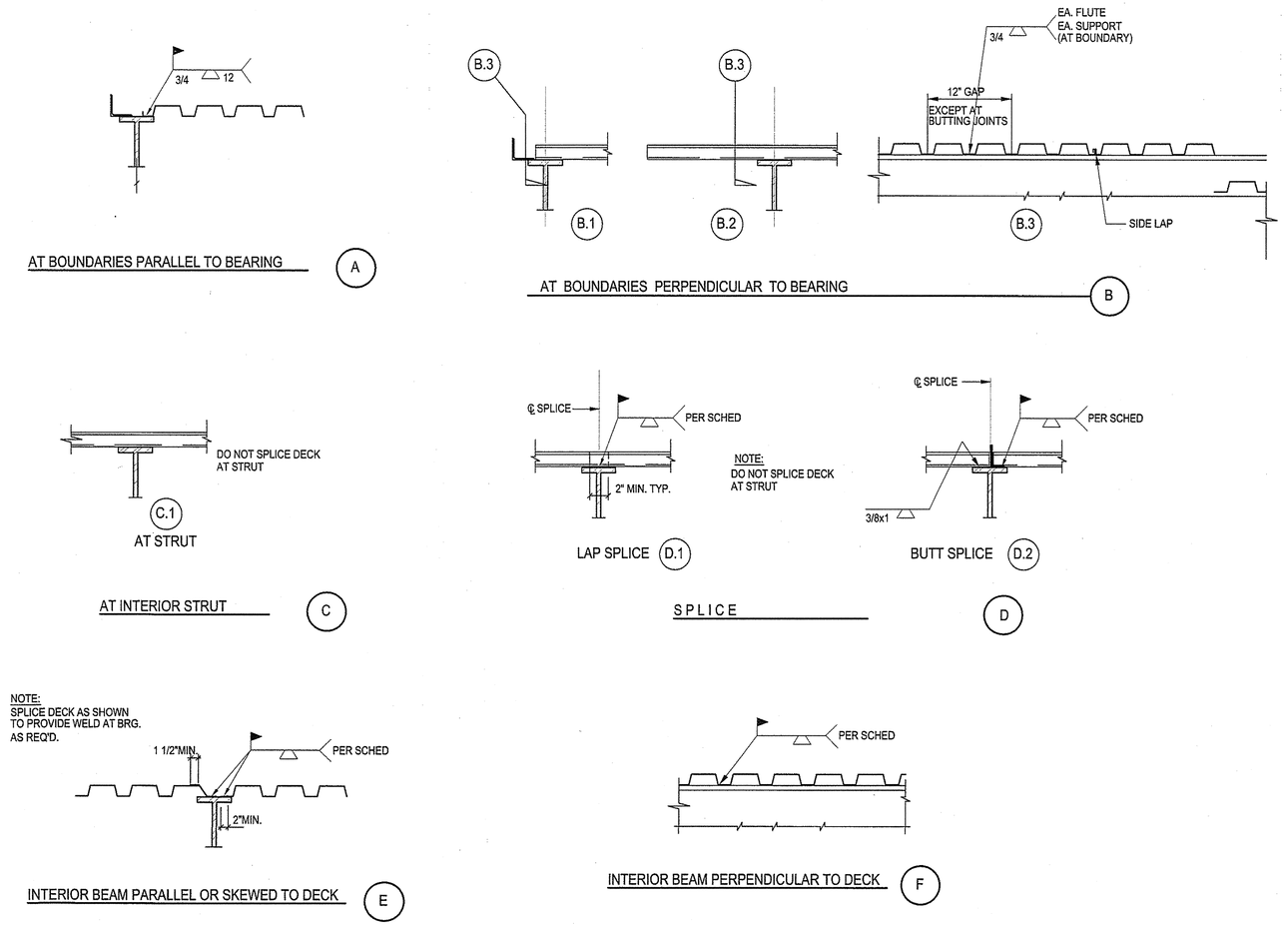

14 TYPICAL METAL DECK ATTACHMENT DETAIL

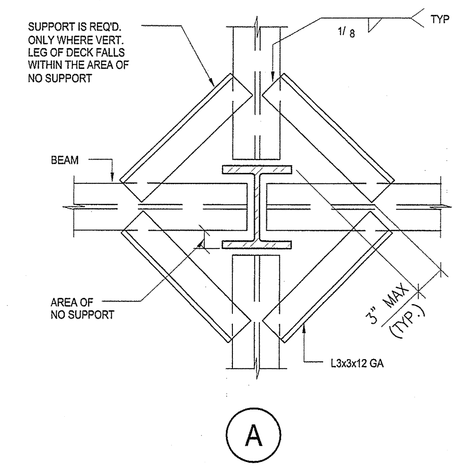

NOTE:
1. FOR COMPOSITE STEEL DECK WITH CONC. CONTRACTOR MAY DELETE ANGELES. SHORE AS REQ'D. DURING CONC. PLACEMENT
2. PROVIDE L'S AS REQUIRED WHERE BEAMS DO NOT FRAME TO COLUMNS. CONTRACTOR TO PROVIDE 16 GA SHEET METAL TO FILL COL. CAVITY AS REQ'D. WHERE BEAMS OCCUR ON 4 SIDES SEE DETAIL. (A)

1 TYPICAL METAL DECK SUPPORT AT COLUMN

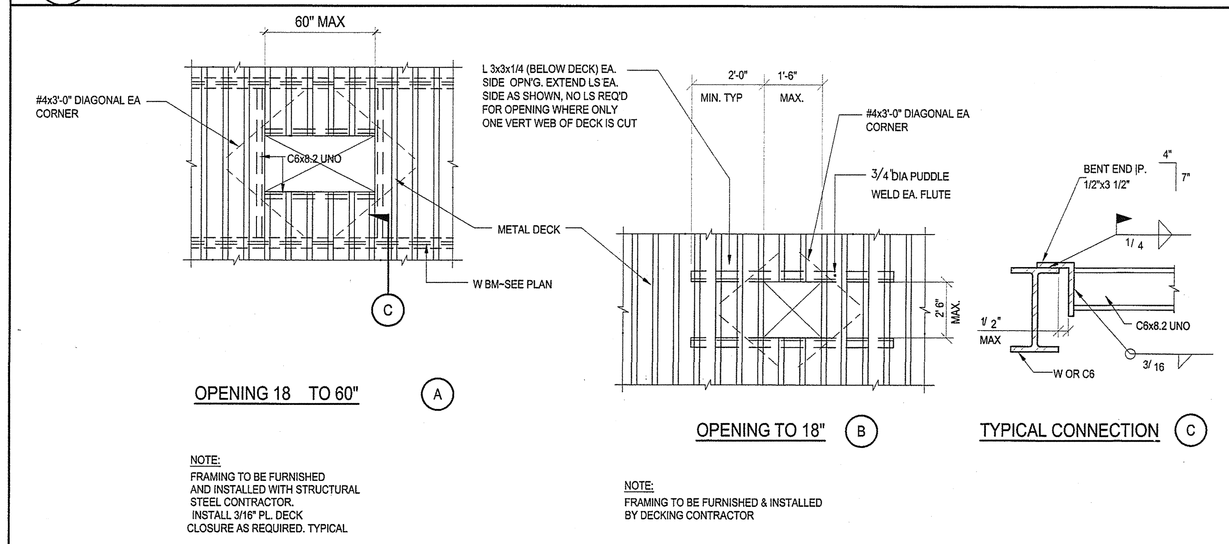

2 TYPICAL OPENINGS IN STL. DECK

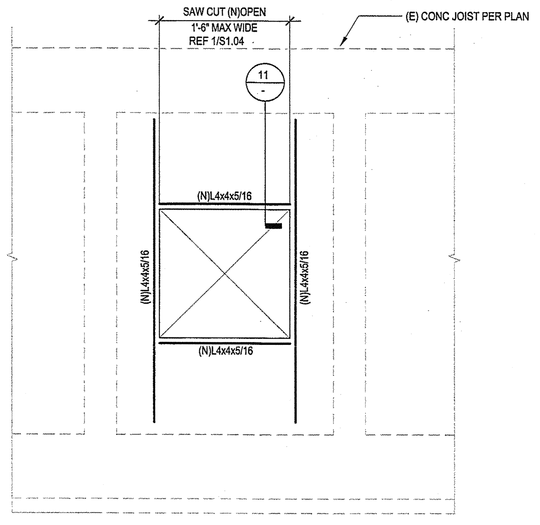

15 TYPICAL (N) OPENING

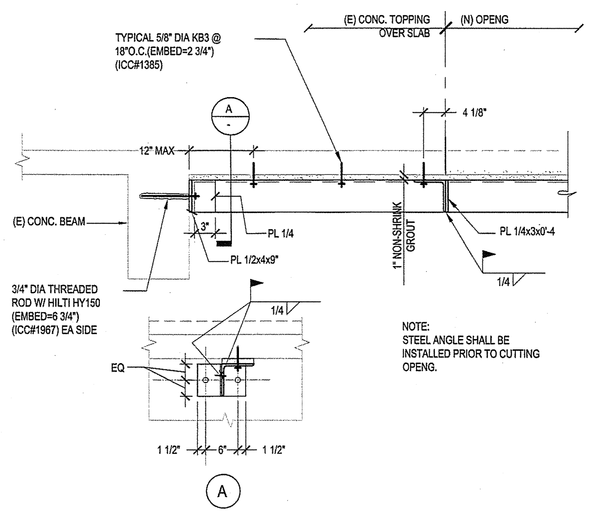

11 DETAIL

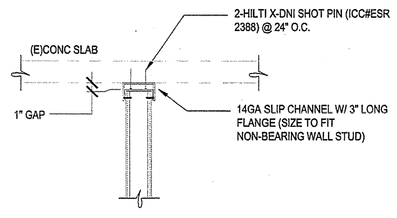

9 TO (E) SLAB

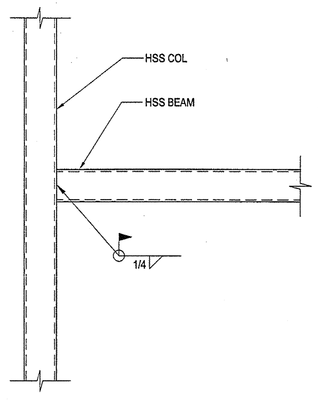

5 DETAIL

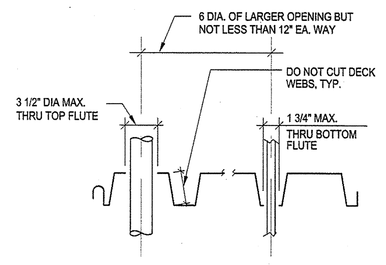

3 TYP OPEN'G AT FLOOR DECK

SYMBOL	METAL DECKS DESIGNATION	GAGE	"T" TOTAL SLAB THICKNESS	CONCRETE FILL & REINF.	METAL DECK FASTENING ARC SPOT (PUDDLE) WELD			SHEAR TRANZ II	PROPERTY		
					PERPENDICULAR TO SUPPORT	PARALLEL TO SUPPORT	SIDE LAP		I (-)	+S (-)	-S (-)
D1	3" VERCO W3 FORMWORK	18	6-1/4"	LT WT CONC. W/ 6X6 - W3.5XW3.5 WWF	(4) PER 36" SHEET	12" O/C	BUTTON PUNCH @ 36" O/C	NO	1.203	0.767	0.767

NOTE:

1. SEE STEEL DECK NOTE ON TYPICAL SHEET.
2. SEE NOTE FOR INSPECTION REQUIREMENT.
3. SEE MANUFACTURERS RECOMMENDATION.
4. ARC SPOT (PUDDLE WELDS SHALL HAVE EFFECTIVE AREA TO SUPPORTING MEMBERS AT LEAST ½" DIAMETER.
5. SEE ALL TYPICAL NOTES FOR CLOSURE PLATES
6. SEE 7/- FOR TYP ATTACHMENT DETAILS.
7. ALL DECK SHALL HAVE 2" MIN. BRG.
8. ALL STEEL DECK SHALL BE GALVANIZED (G60). USE (G90) GALVANIZED FOR METAL DECK EXPOSED TO WEATHER, U.N.O.
9. NO LOADS OF ANY KIND SHALL BE HUNG FROM ROOF DECK UNLESS SPECIFICALLY DETAILED ON STRUCTURAL DRAWINGS.
10. FOR METAL SUPPORT @ COLUMN, SEE DETAIL "1/-"
11. REF CONCRETE NOTES ON S-0.01 FOR REQUIRED MIN 28 DAY COMPRESSIVE STRENGTH
12. METAL DECK SHALL SPAN, 3 SPANS MINIMUM

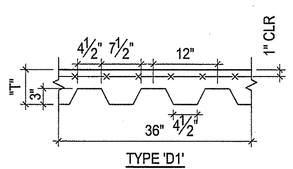

16 METAL DECK SCHEDULE

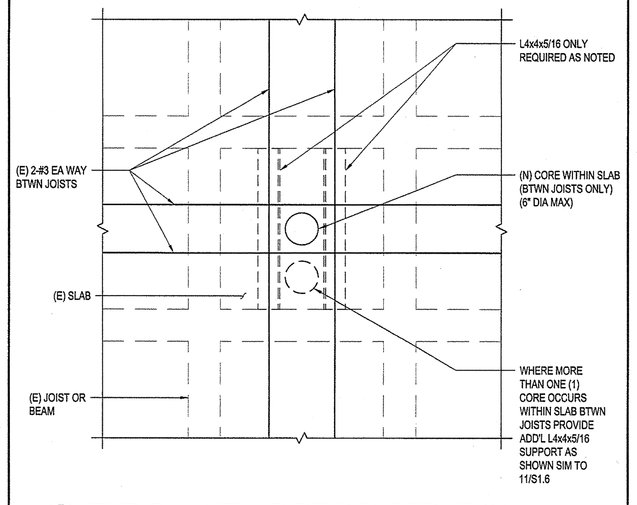

10 TYPICAL NEW PIPE PENETRATION

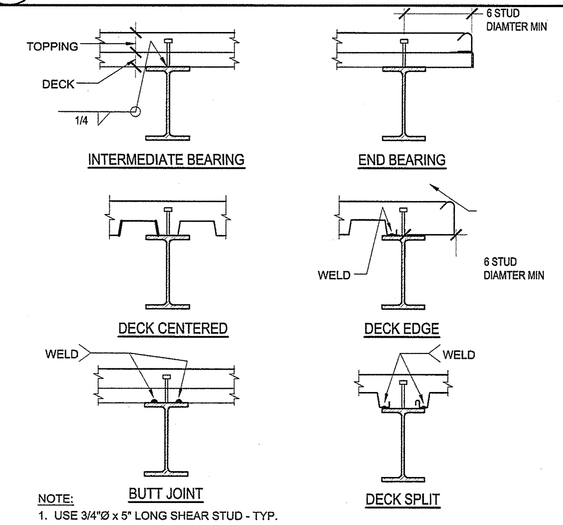

NOTE:
1. USE 3/4"Ø x 5" LONG SHEAR STUD - TYP.
2. WHERE DECK DOES NOT LAND ON BEAM, PROVIDE CONT BENT PLATE
3. FOR DECK WELDING, SEE DETAIL 16/-

6 TYPICAL SHEAR STUDS

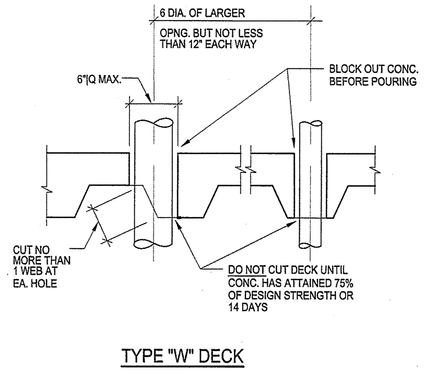

4 TYP OPEN'G AT FLOOR DECK

SADDLEBACK COLLEGE

gkkworks
2355 Main Street Suite 220
Irvine | CA 92614
949 250 1500
949 955 2708 fax

Architect Seal

LICENSED ARCHITECT MATTHEW S. GREINER NO. C27137 REN. 10-31-09 STATE OF CALIFORNIA

Consultant and Seal

Thornton Tomasetti
Thornton Tomasetti, Inc.
2415 Campus Drive, Suite 110
Irvine CA 92612-8530
T 949.271.3300 F 949.271.

JOB# GG7524.00

REGISTERED PROFESSIONAL ENGINEER JOSEPH ALAN BRUNER C 04029 12-31-08 STRUCTURAL STATE OF CALIFORNIA

Agency Approval

IDENTIFICATION STAMP
DIV. OF THE STATE ARCHITECT
APPL. # 04-109129
AC_____ FLS_____ SS TB
DATE MAY 07 2008

No.	Date	Revision/Issue

Project Name

JAMES B. UTT MEMORIAL LEARNING RESOURCE CENTER RENOVATION
28000 Marguerite Parkway
Mission Viejo, California 92692

Checked By DT | Drawn By MG

Sheet Title

TYPICAL DETAILS

Sheet Number

S1.6

Project Number GG7524.00 | Scale 3/4"=1'-0"

© 2007 gkkworks, All Rights Reserved
NO PART OF THE CONTENTS OF THIS DOCUMENT MAY BE REPRODUCED OR TRANSMITTED IN ANY FORM OR BY ANY MEANS WITHOUT THE WRITTEN PERMISSION OF GKKWORKS.

P:\SJA\PROJECTS\GG0700.GG - REDCOSD_JAMES B. UTT LIBRARY BLDG\DRAWINGS\BID\TASK\TASK\PRINTS\S1-6.DWG - PLOTTED BY Sandra_Margarito - ON - 14-Apr-08

OR531777-51697 P1 S2 - R C CONSTRUCTION SERVICES - PG 134 OF 235 (P1 S2) 1 SET.TIF - 2/3/2010 - 15:34