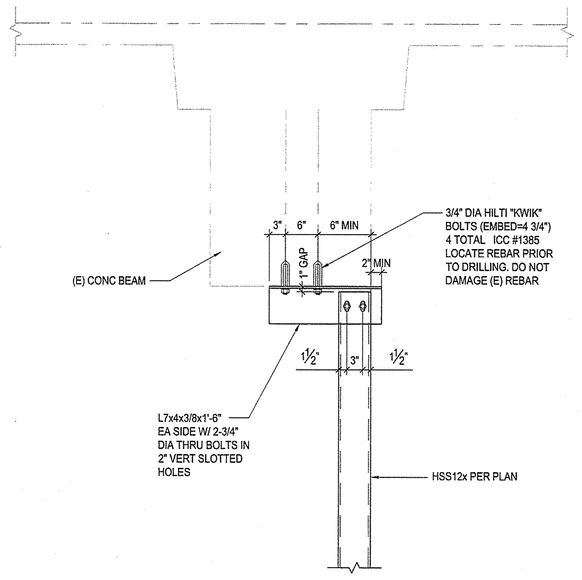

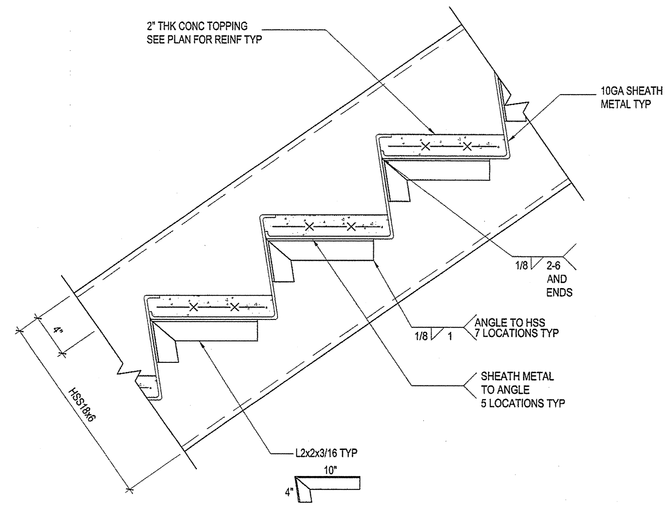

7 TYPICAL DETAIL AT STAIR AND RISER
SCALE: 1 1/2" = 1'-0"

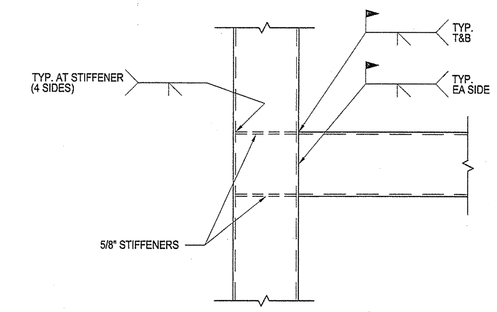

4 DETAIL

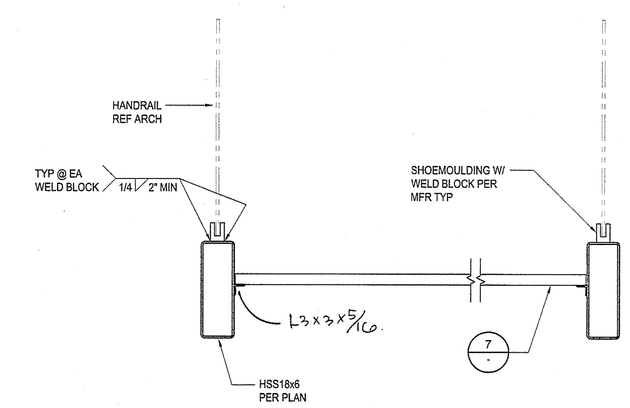

1 DETAIL

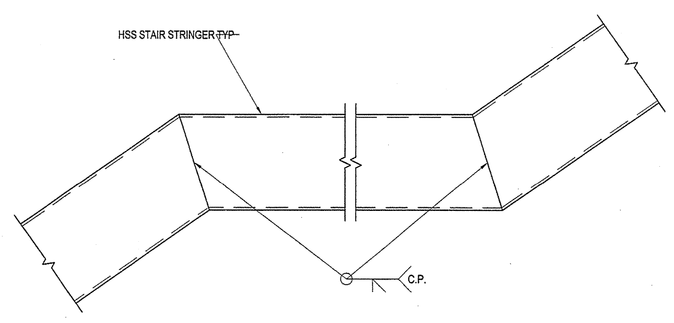

8 CONNECTION DETAIL

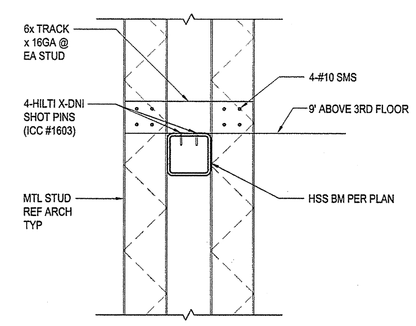

5 DETAIL

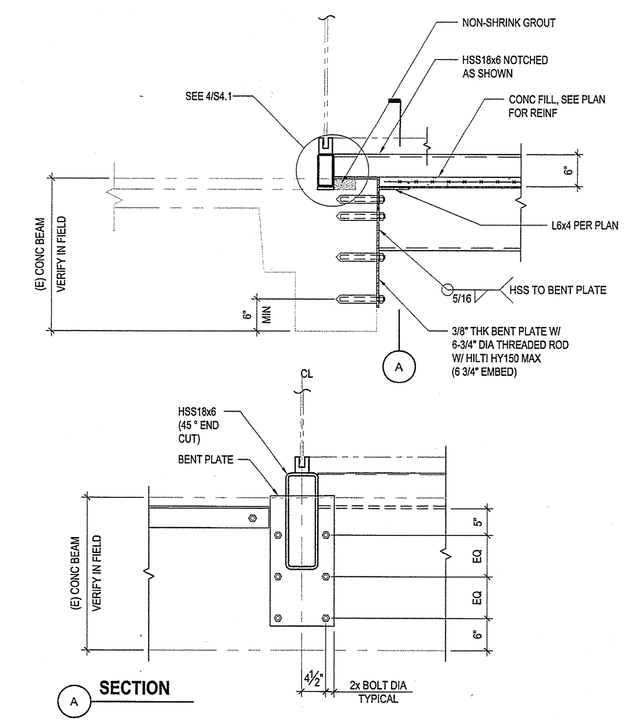

2 CONNECTION DETAIL

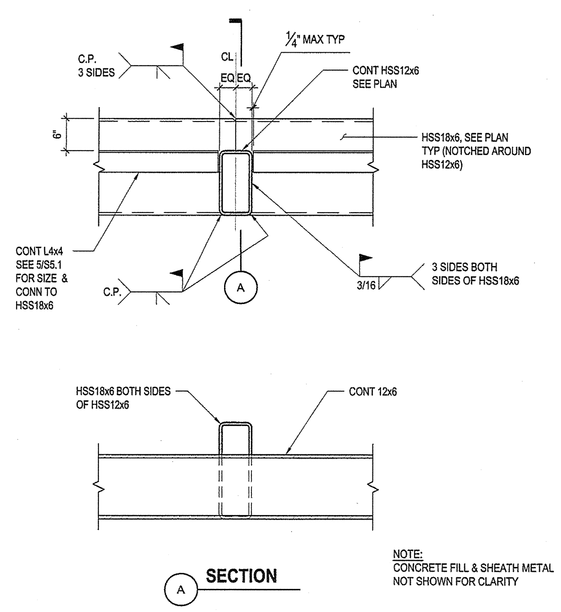

9 DETAIL

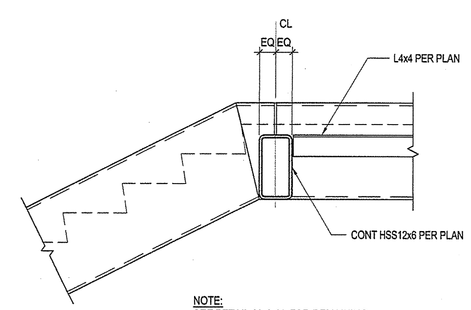

NOTE:
SEE DETAIL 8/- & 9/- FOR REMAINING INFORMATION

6 DETAIL

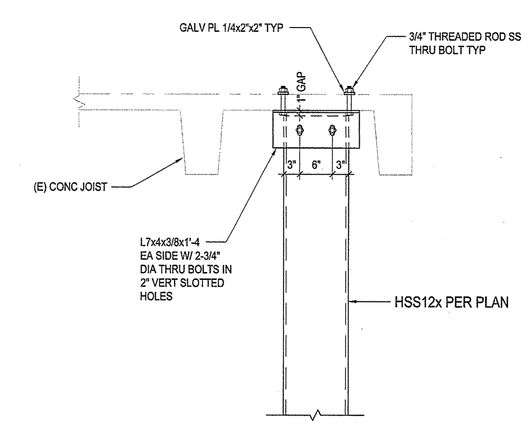

3 DETAIL

gkkworks
2355 Main Street Suite 220
Irvine | CA 92614
949 250 1500
949 955 2708 fax

Architect Seal

LICENSED ARCHITECT
MATTHEW S. GREINER
NO. C21137
REN. 10-31-09
STATE OF CALIFORNIA

Consultant and Seal

Thornton Tomasetti
Thornton Tomasetti, Inc.
2415 Campus Drive, Suite 110
Irvine CA 92612-8530
T 949.271.3300 F 949.271.3301
JOB# GG7524.00

REGISTERED PROFESSIONAL ENGINEER
JAMES-KEON TAGHAVI
No. S 04029
Exp. 6-30-08
STRUCTURAL
STATE OF CALIFORNIA

Agency Approval

IDENTIFICATION STAMP
DIV. OF THE STATE ARCHITECT
APPL. # 04-109129
AC_____ FLS_____ SS 12
DATE MAY 07 2008

No.	Date	Revision/Issue

Project Name

JAMES B. UTT MEMORIAL LEARNING RESOURCE CENTER RENOVATION
28000 Marguerite Parkway
Mission Viejo, California 92692

Checked By DT | Drawn By MG

Sheet Title

STRUCTURAL DETAILS

Sheet Number

S5.2

Project Number GG7524.00 | Scale 3/4"=1'-0"

© 2007 gkkworks, All Rights Reserved
NO PART OF THE CONTENTS OF THIS DOCUMENT MAY BE REPRODUCED OR TRANSMITTED IN ANY FORM OR BY ANY MEANS WITHOUT THE WRITTEN PERMISSION OF GKKWORKS.

P:\CS\PROJECT\GG7524.00 - RESCHOOL JAMES B. UTT LIBRARY BUILDING\DRAWING\STRUCT\STRUCT\DWG\S5.2.DWG - PLOTTED BY Garcia, Margarita - ON - 14-Apr-08

OR531777-51697 P1 S2 - R C CONSTRUCTION SERVICES - PG 145 OF 235 (P1 S2) 1 SET.TIF - 2/3/2010 - 15:34