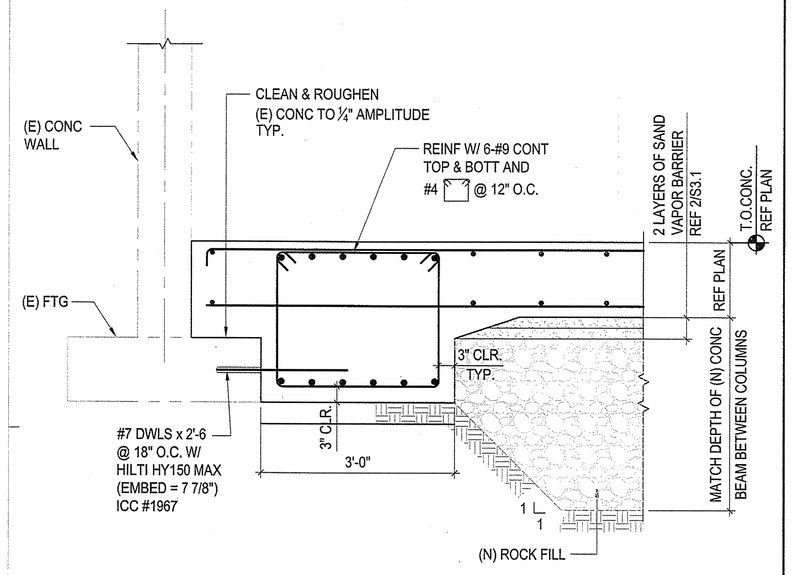

8 DETAIL
SCALE: 1"=1'-0"

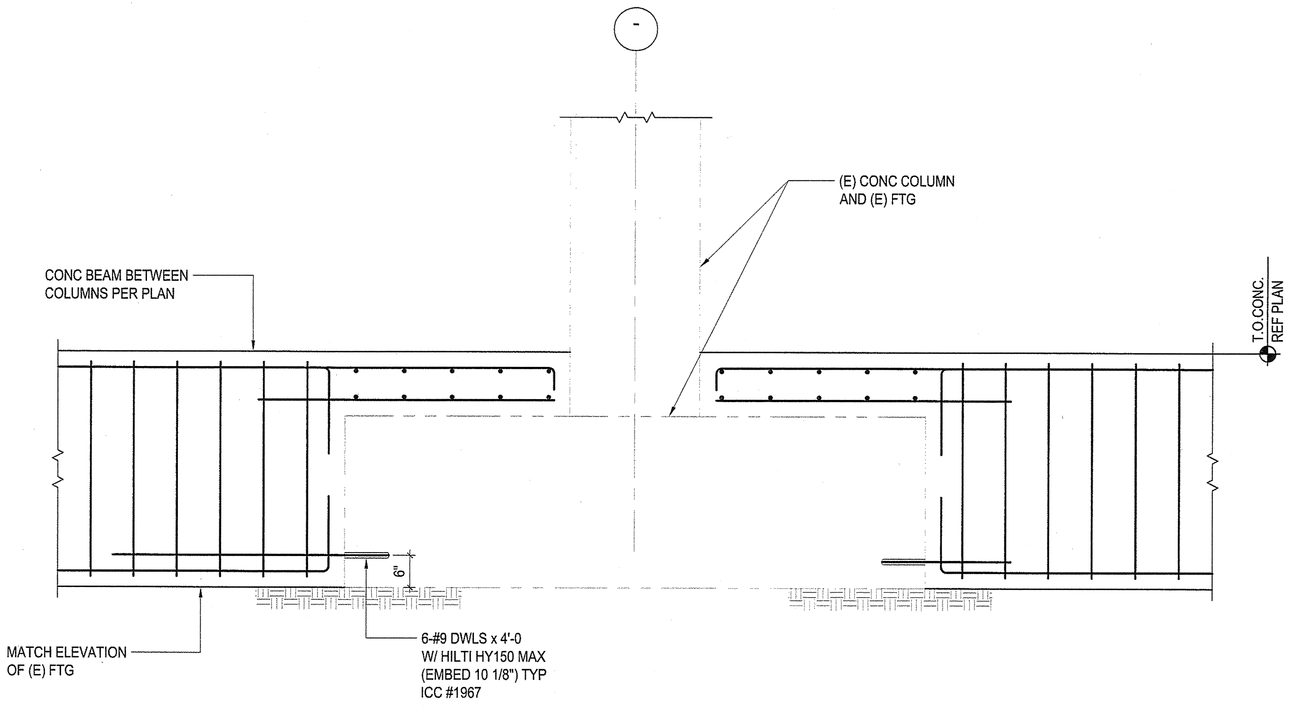

4 DETAIL

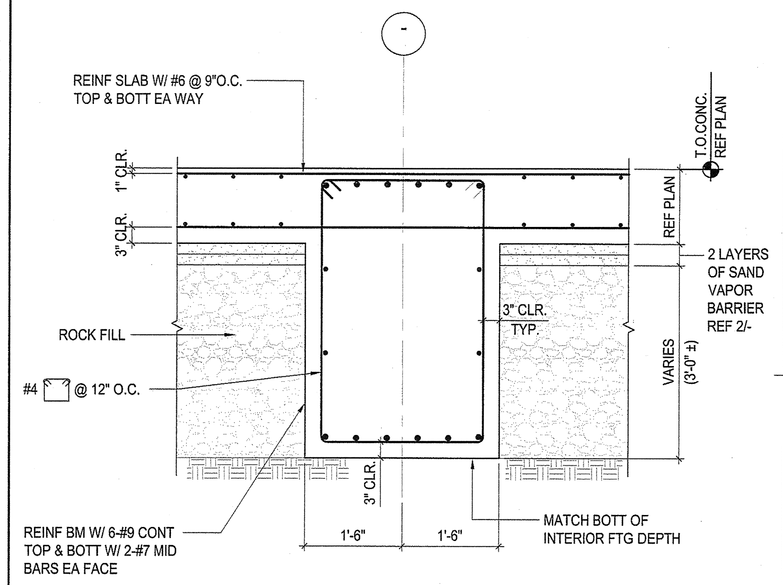

1 DETAIL

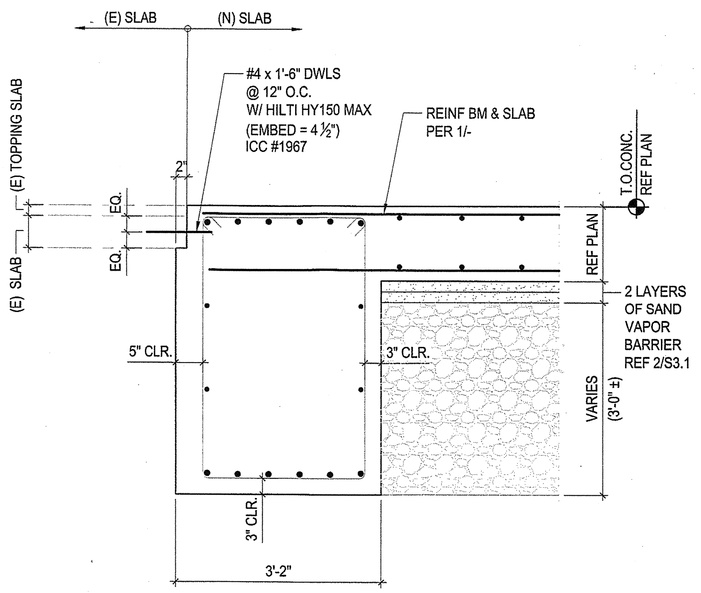

9 DETAIL

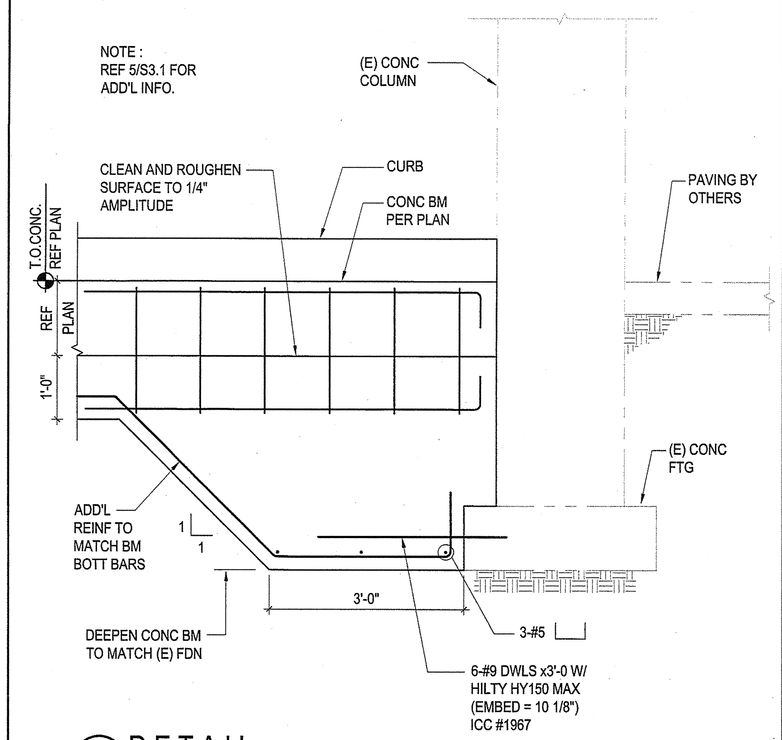

6 DETAIL
SCALE: 1"=1'-0"

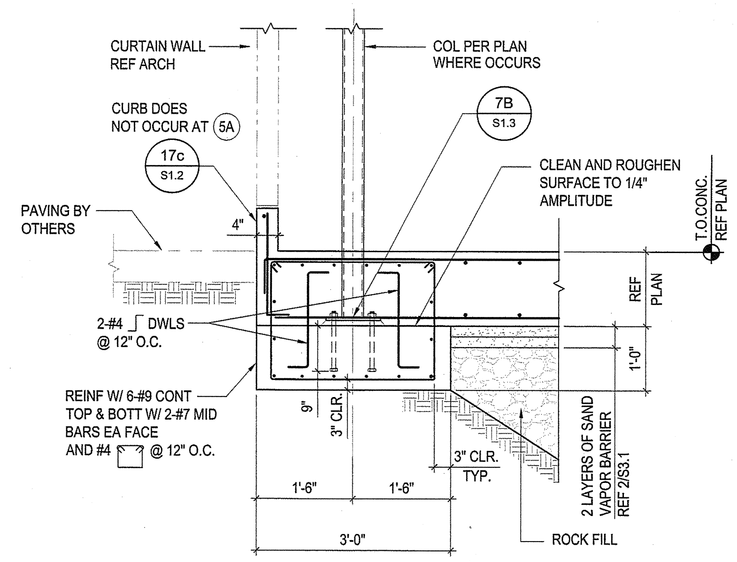

5 5A DETAIL

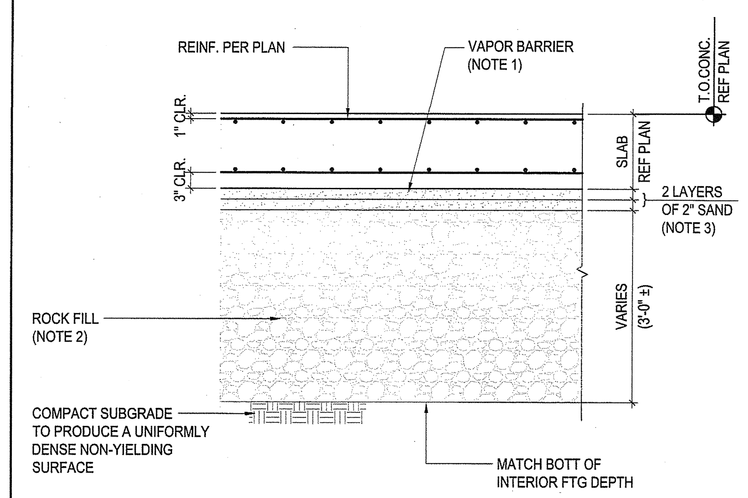

NOTES :
1. VAPOR BARRIER SHALL BE 2 LAYERS OF 10 MIL VISQUEEN. SEAL ALL SPLICES, PLUMBING AND PERIMETER OF SLAB.
2. ROCK FILL SHALL BE GRAVEL OR CRUSHED ROCK WITH NO MORE THAN TEN PERCENT PASSING THE ¾ INCH SIEVE AND NO MORE THAN FIVE PERCENT PASSING THE NO. 200 SIEVE.
3. SAND SHALL HAVE SUFFICIENT FINES OR MINOR CEMENT TO PROVIDE FOR A COMPACTED UNYIELDING SURFACE.

2 DETAIL

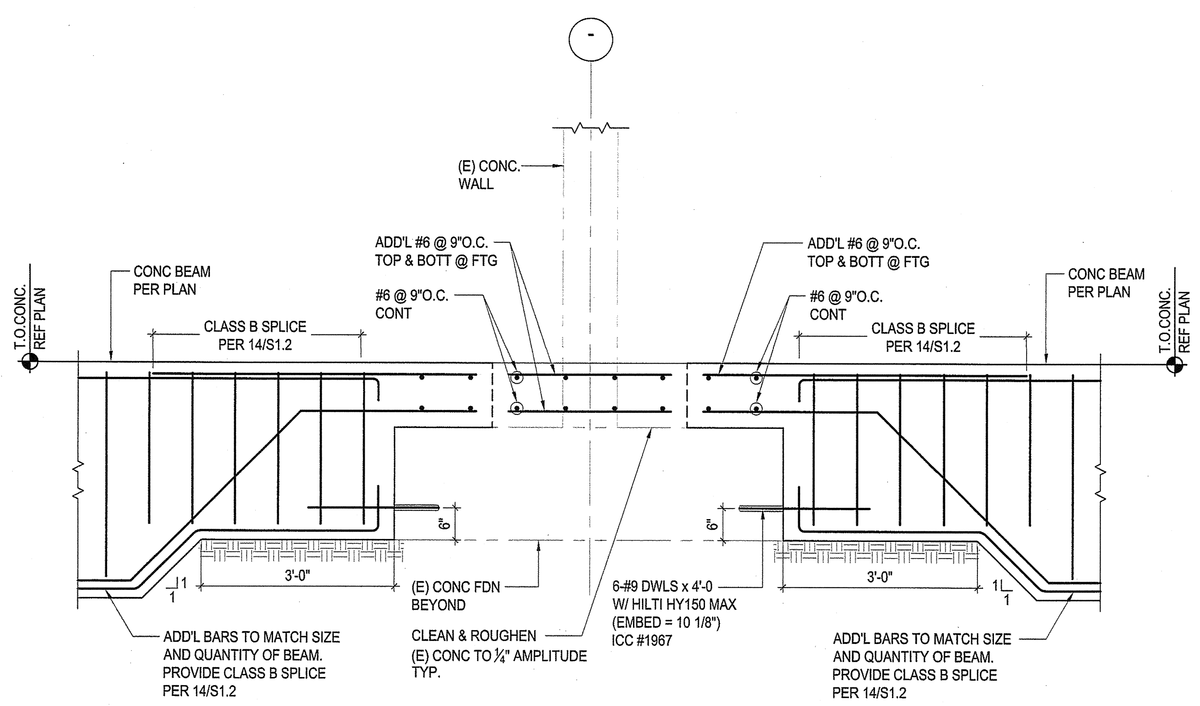

7 DETAIL

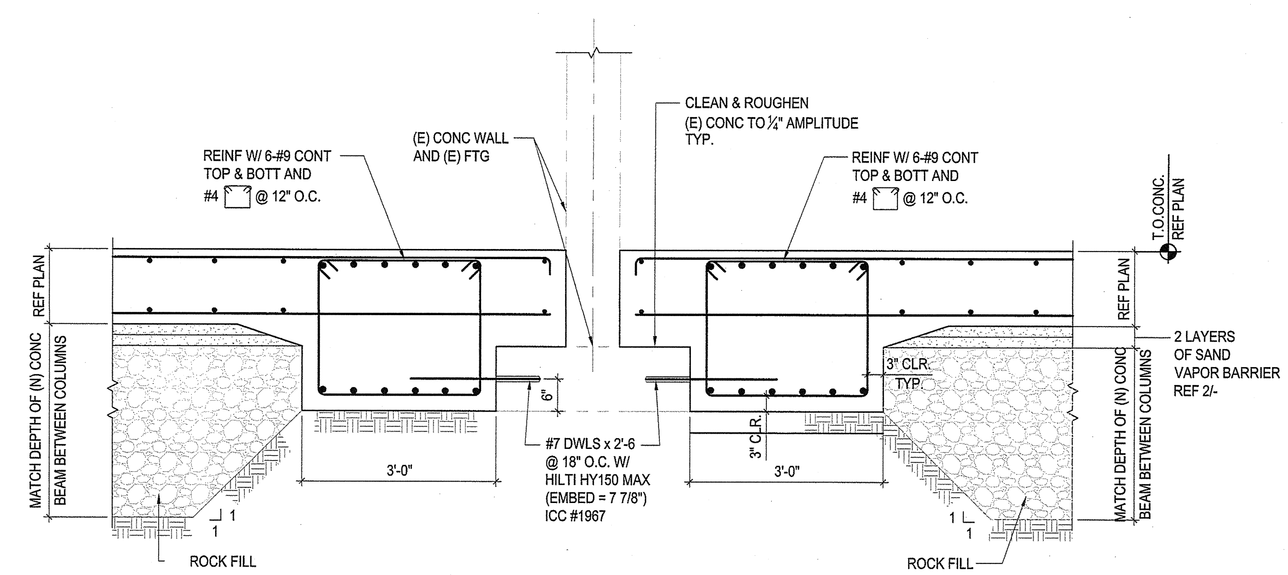

3 DETAIL

SADDLEBACK COLLEGE

gkkworks
2355 Main Street Suite 220
Irvine | CA 92614
949 250 1500
949 955 2708 fax

Architect Seal

LICENSED ARCHITECT MATTHEW S. GREINER NO. C27137 REN. 02-28-09 STATE OF CALIFORNIA

Consultant and Seal

Thornton Tomasetti
Thornton Tomasetti, Inc.
2415 Campus Drive, Suite 110
Irvine CA 926112-8530
T 949.271.3300 F 949.271.

JOB# GG7524.00

REGISTERED PROFESSIONAL ENGINEER JAY-FEIN WU No. S4029 Exp. 12-31-08 STRUCTURAL STATE OF CALIFORNIA

Agency Approval

IDENTIFICATION STAMP
DIV. OF THE STATE ARCHITECT
APPL. # 04-109129
AC____ FLS____ SS TB
DATE MAY 07 2008

No.	Date	Revision/Issue

Project Name

JAMES B. UTT MEMORIAL LEARNING RESOURCE CENTER RENOVATION
28000 Marguerite Parkway
Mission Viejo, California 92692

Checked By DT | Drawn By MG

Sheet Title

STRUCTURAL DETAILS

Sheet Number

S3.1

Project Number GG7524.00 | Scale 3/4"=1'-0"

© 2007 gkkworks, All Rights Reserved
NO PART OF THE CONTENTS OF THIS DOCUMENT MAY BE REPRODUCED OR TRANSMITTED IN ANY FORM OR BY ANY MEANS WITHOUT THE WRITTEN PERMISSION OF GKKWORKS.

OR331777-51697 P1 S2 - R C CONSTRUCTION SERVICES - PG 140 OF 235 (P1 S2) 1 SET.TIF - 2/3/2010 - 15:34

P:\GA\PROJECTS\GG7524.00 - REMODEL JAMES B. UTT LIBRARY BUILDING\DRAWINGS\STRUCTURAL\PRINTED\S3.1.DWG - PLOTTED BY Garcia, Magaly - ON - 14-Apr-08