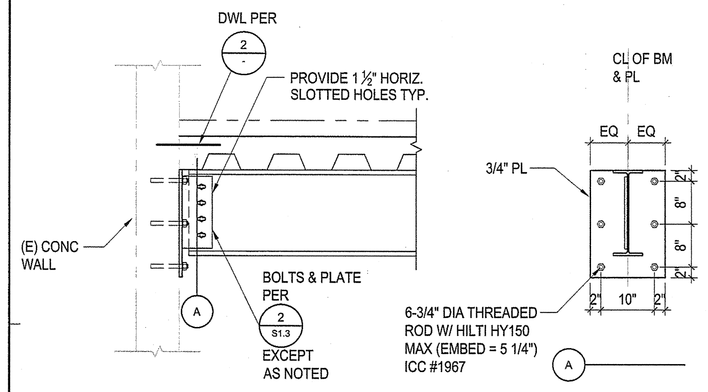

9 ATTACHMENT AT CONC WALL
SCALE: 3/4"=1'-0"

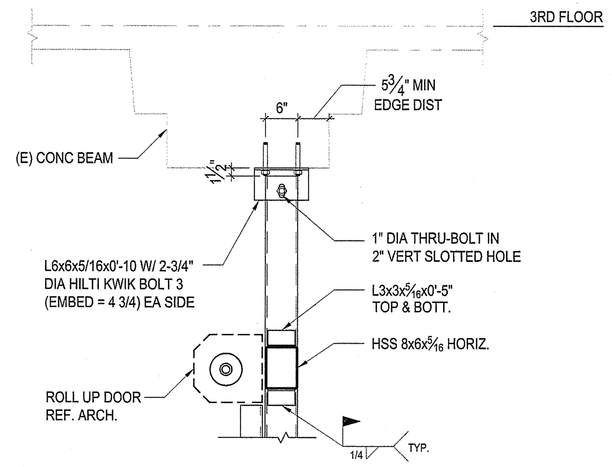

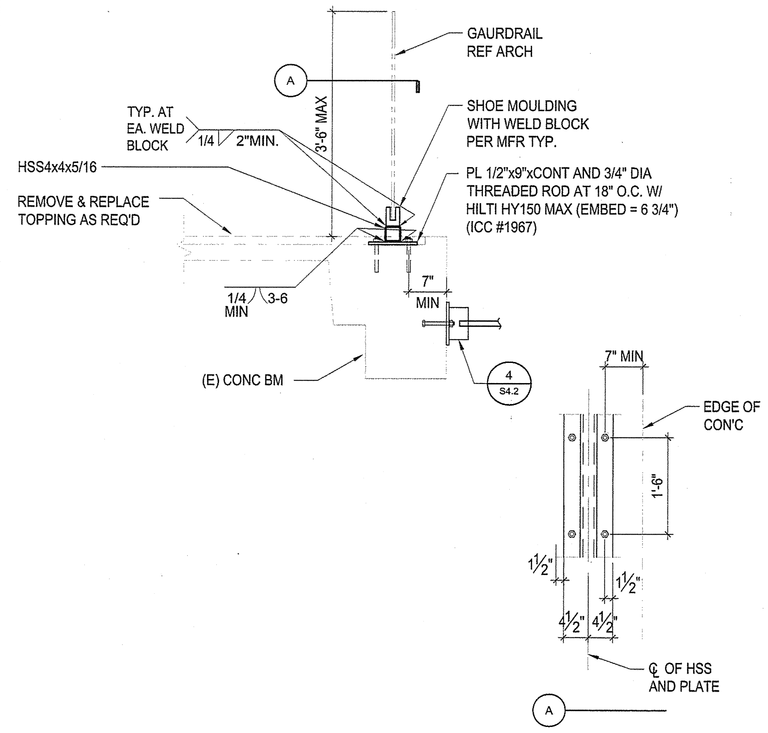

4 DETAIL
SCALE: 3/4"=1'-0"

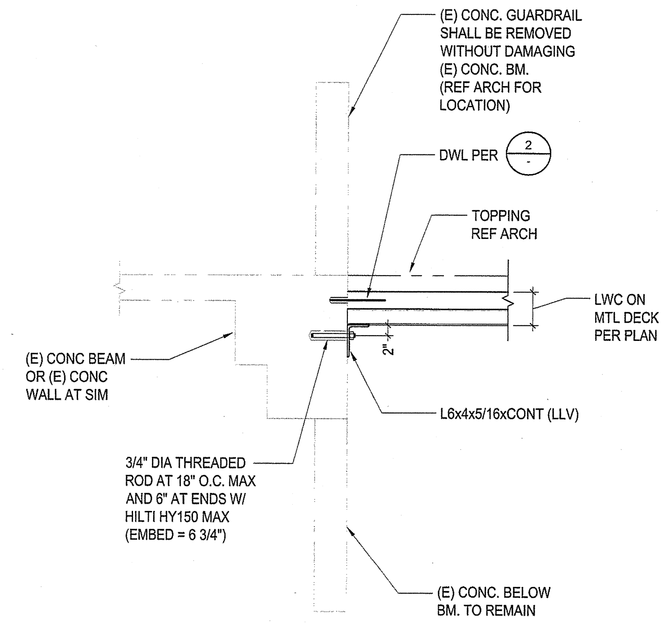

1 DETAIL
SCALE: 3/4"=1'-0"

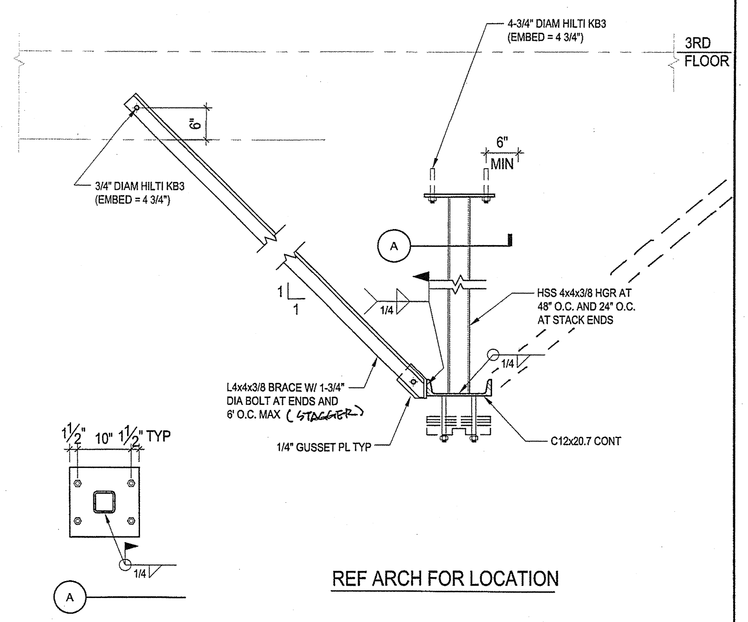

REF ARCH FOR LOCATION

10 OPERABLE PARTITION
SCALE: 3/4"=1'-0"

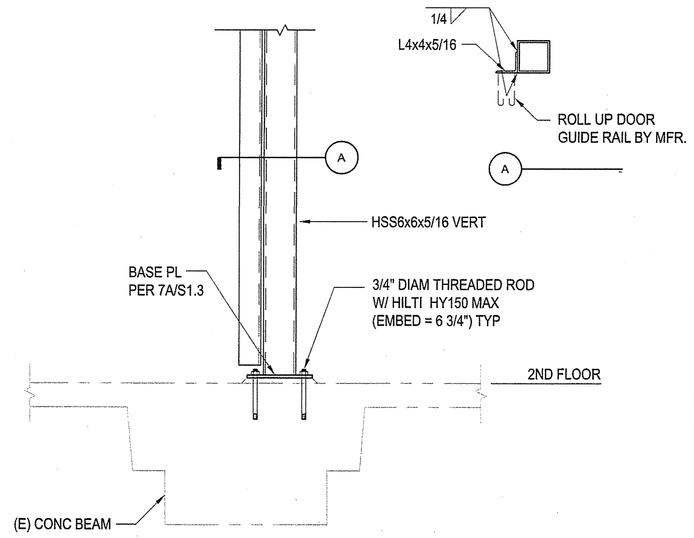

REF ARCH FOR LOCATION

7 ROLL UP DOOR ATTACHMENT AT HSS COLUMN
SCALE: 3/4"=1'-0"

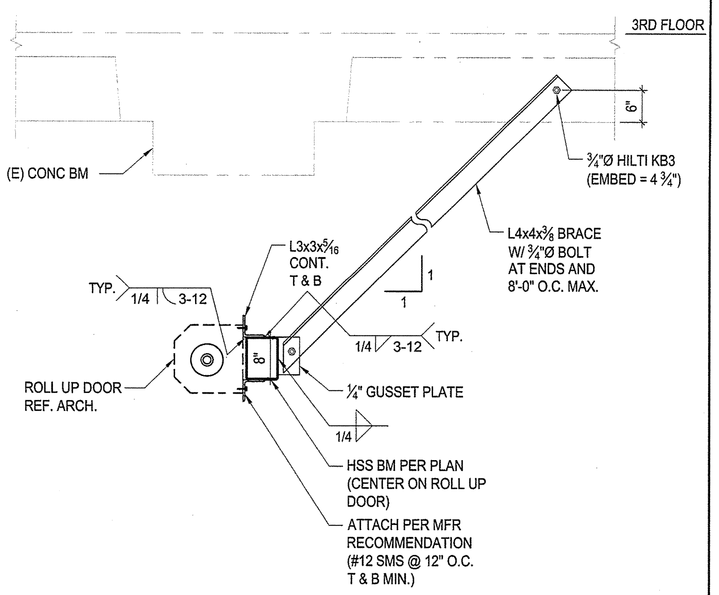

5

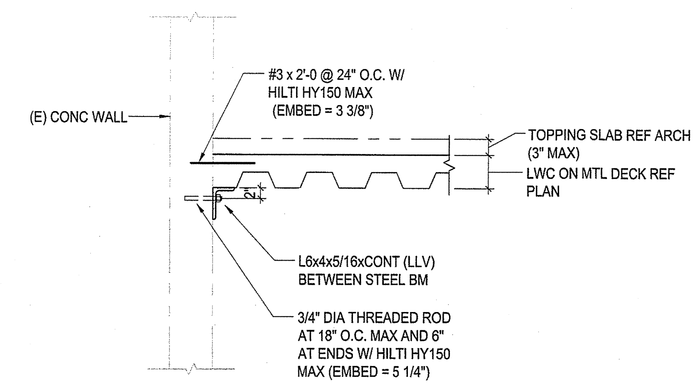

2 DETAIL
SCALE: 3/4"=1'-0"

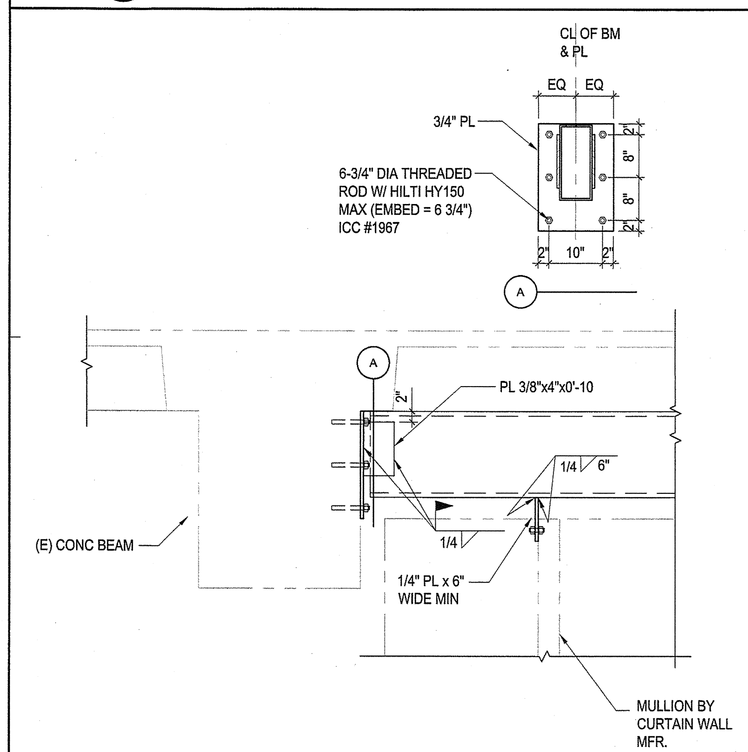

11 DETAIL
SCALE: 3/4"=1'-0"

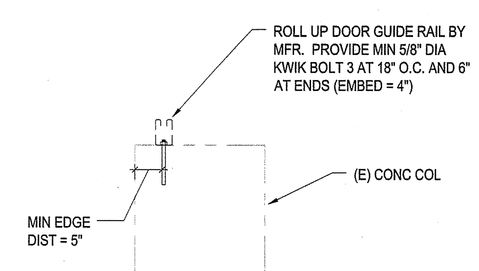

REF ARCH FOR LOCATION

8 ROLL UP DOOR ATTACHMENT AT CONC COL
SCALE: 3/4"=1'-0"

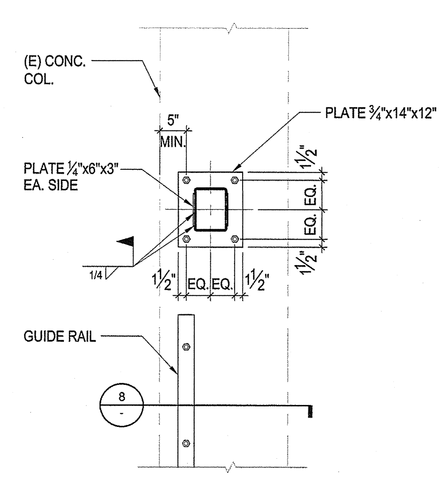

6

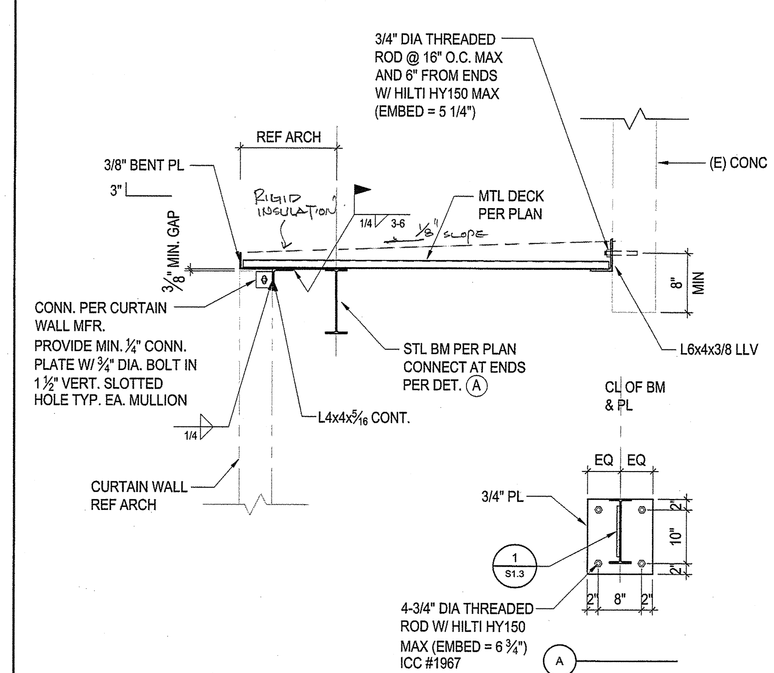

3 DETAIL
SCALE: 1"=1'-0"

SADDLEBACK COLLEGE

gkkworks
2355 Main Street Suite 220
Irvine | CA 92614
949 250 1500
949 955 2708 fax

Architect Seal

LICENSED ARCHITECT MATTHEW S. GREINER NO. C27137 REN.: 10-31-10 STATE OF CALIFORNIA

Consultant and Seal

Thornton Tomasetti
Thornton Tomasetti, Inc.
2415 Campus Drive, Suite 110
Irvine CA 92612-8530
T 949.271.3300 F 949.271.

JOB# GG7524.00

REGISTERED PROFESSIONAL ENGINEER No. S 04029 STRUCTURAL STATE OF CALIFORNIA

Agency Approval

IDENTIFICATION STAMP
DIV. OF THE STATE ARCHITECT
APPL. # 04-109129
AC.____ FLS.____ SS. TB
DATE MAY 07 2008

No.	Date	Revision/Issue

Project Name

JAMES B. UTT MEMORIAL LEARNING RESOURCE CENTER RENOVATION
28000 Marguerite Parkway
Mission Viejo, California 92692

Checked By	Drawn By
DT	MG

Sheet Title

STRUCTURAL DETAILS

Sheet Number

S4.1

Project Number	Scale
GG7524.00	3/4"=1'-0"

© 2007 gkkworks, All Rights Reserved
NO PART OF THE CONTENTS OF THIS DOCUMENT MAY BE REPRODUCED OR TRANSMITTED IN ANY FORM OR BY ANY MEANS WITHOUT THE WRITTEN PERMISSION OF GKKWORKS.

OR331777-51697 P1 S2 - R C CONSTRUCTION SERVICES - PG 142 OF 235 (P1 S2) 1 SET.TIF - 2/3/2010 - 15:34
P:\CAD\PROJECTS\GOOTS\4-00 - REMODEL JAMES B. UTT LIBRARY BUILDING\DRAWINGS\STRUCTURAL\S\S4-1.DWG - PLOTTED BY Garcia, Margarita - On - 14-Apr-08