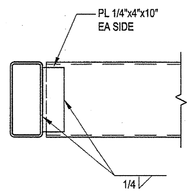

13 DETAIL
N/A

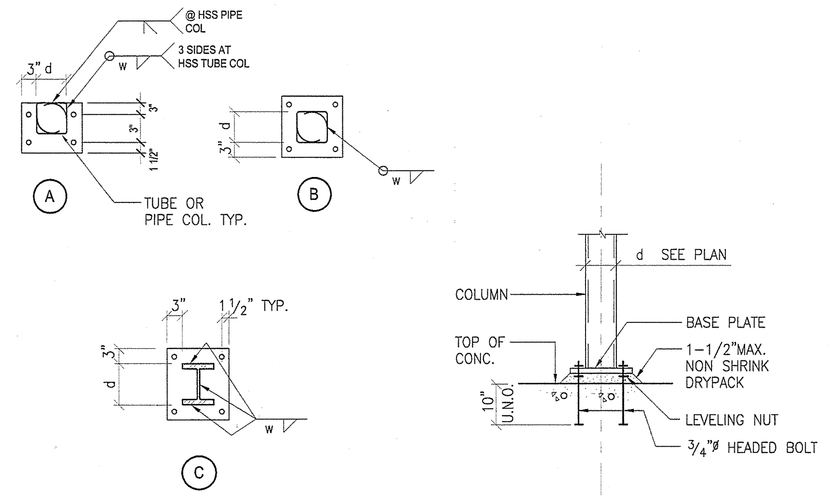

SCHEDULE		
MEMBER SIZE d	PLATE THICKNESS	WELD w
4" OR LESS	5/8"	1/4"
4-1/4" TO 6"	3/4"	1/4"
6-1/4" TO 8"	1"	5/16"
8-1/4" TO 12"	1-1/4"	5/16"
12-1/4" TO 16"	1-1/2"	3/8"

7 TYPICAL COLUMN BASE PLATE
N/A

SIMPLE BEAM CONNECTION SCHEDULE			
SHEAR PL. CONNECTION			
MEMBER (DEPTH)	# OF BOLTS	CONN. PL. "t"	WELD SIZE "A"
8"	2	3/8"	1/4"
8" - 10"	2	3/8"	1/4"
12" - 14"	3	3/8"	1/4"
15" - 16"	4	3/8"	1/4"
18"	5	1/2"	5/16"
20" & 21"	5	1/2"	5/16"
24"	6	5/8"	5/16"
27"	7	5/8"	5/16"
30" & 33"	8	5/8"	5/16"
36"	9	5/8"	5/16"

1 TYPICAL BOLT SCHEDULE
N/A

NOTES:

1. FILLET WELD SIZE SHALL BE AS SHOWN UNLESS A GREATER SIZE IS REQUIRED BY A.I.S.C. TABLE J2.4.
2. d = DIAM. OF BOLT
3. BOLTS SHALL BE 1"ø A325 FOR BEAM UP TO 21" DEEP BOLTS SHALL BE 7/8" DIA A490SC FOR BEAMS 24" AND LARGER (ALL STRUT BEAMS (S) SHALL BE CONNECTED W/ 7/8" DIA A490SC)
4. WHERE NUMBER OF REQ'D BOLTS PER PLAN ARE MORE THAN NUMBER OF BOLTS IN SCHEDULE, USE MAXIMUM BOLTS POSSIBLE IN FIRST ROW AND BALANCE IN SECOND ROW WITH 3" FROM FIRST ROW. (2 BOLTS MIN. AT SECOND ROW) BOLTS IN SECOND ROW SHALL BE PLACED EQUALLY BETWEEN TOP AND BOTTOM BOLTS IN FIRST ROW.
5. INSTALLATION OF HIGH STRENGTH BOLTS IN SLIP CRITICAL JOINT SHALL BE TENSIONED BY CALIBRATED WRENCH AND UNDER CONTINUOUS INSPECTION BY SPECIAL INSPECTOR. WRENCH SHALL BE CALIBRATED AT LEAST TWICE A DAY.

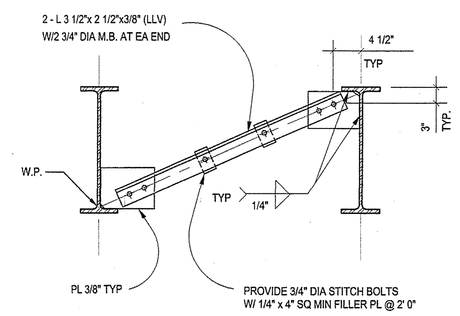

14 TYPICAL ANGLE BRACE
N/A

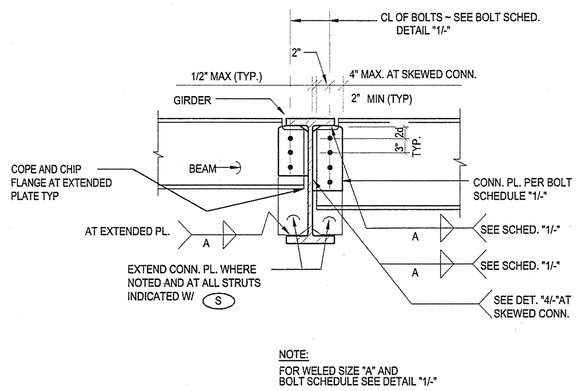

NOTE:
FOR WELED SIZE "A" AND BOLT SCHEDULE SEE DETAIL "1/-"

TYPICAL BEAM (A)

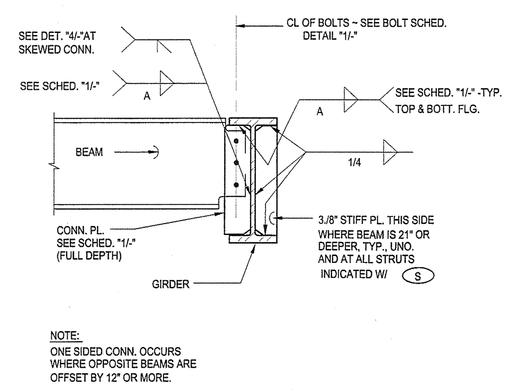

NOTE:
ONE SIDED CONN. OCCURS WHERE OPPOSITE BEAMS ARE OFFSET BY 12" OR MORE.

ONE SIDE BEAM CONNECTION (B)

8 TYPICAL BEAM TO BEAM CONNECTION
N/A

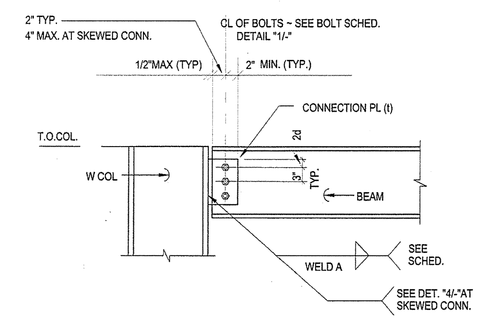

BEAM TO COLUMN FLANGE (A)

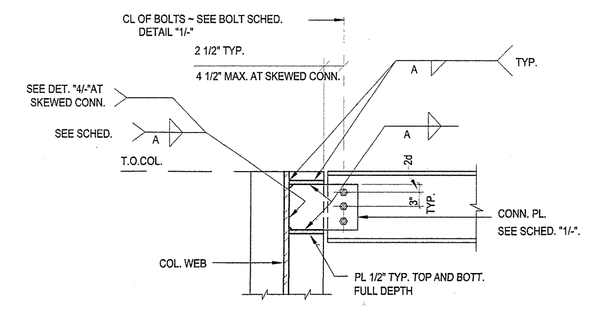

NOTE:
FOR WELD SIZE "A", CONNX PLATE "t" AND BOLT SCHEDULE SEE DETAIL "1/-"

BEAM TO COLUMN WEB (B)

2 TYPICAL BEAM TO COLUMN CONNECTION
N/A

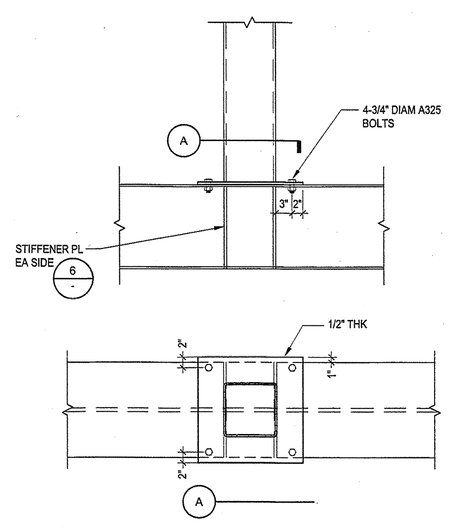

15 DETAIL
N/A

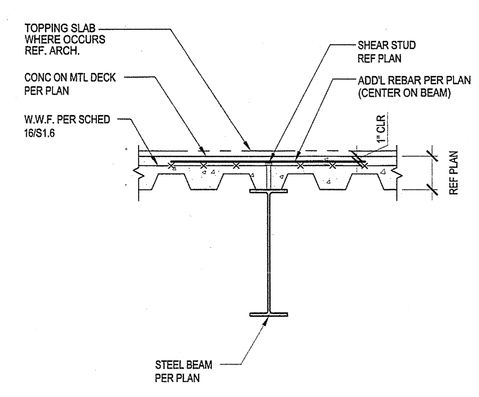

11 TYPICAL GIRDER
N/A

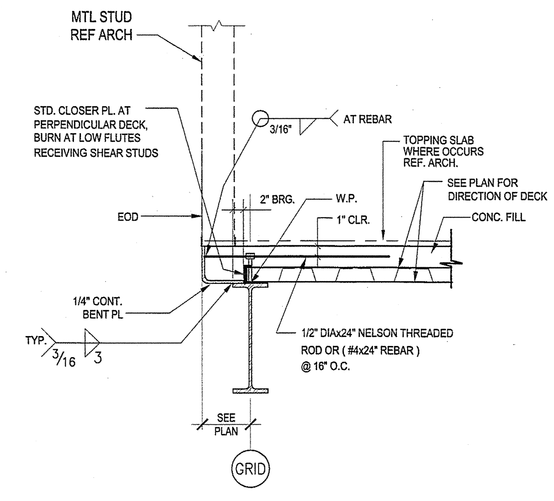

9 TYPICAL FLOOR EDGE
N/A

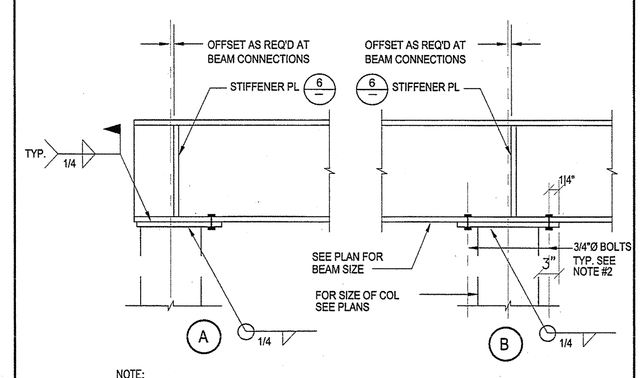

NOTE:
1. COL. CAP PLATE SHALL BE THE SAME WIDTH AS BEAM FLANGE OR COL. DIM.+1/2" (WHICHEVER IS GREATER). THICKNESS SAME AS BEAM FLANGE (1/2" MIN.)
2. USE 5/8"DIA M.B. WHEN FLG. = 4"

5 BEAM BEARING ON COLUMN
N/A

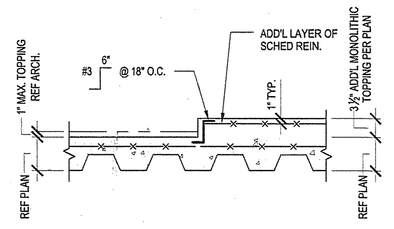

3 DETAIL
N/A

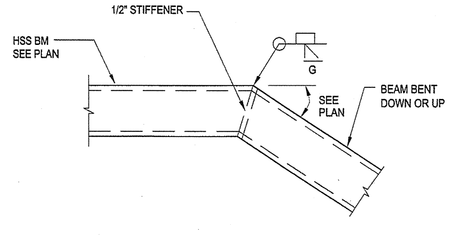

16 TYPICAL BENT HSS BEAM
N/A

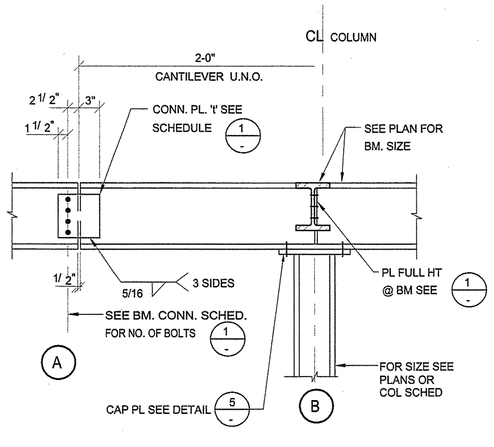

12 TYPICAL CANTILEVER BEAM
N/A

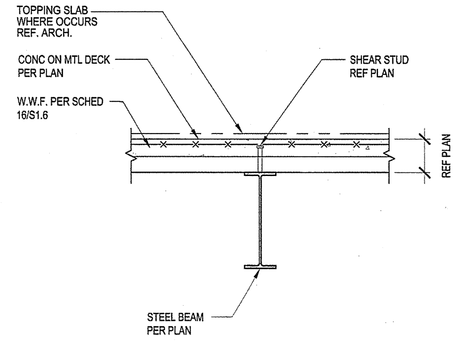

10 TYPICAL PURLIN
N/A

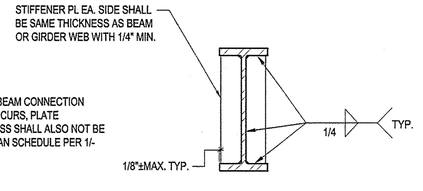

NOTE:
WHERE BEAM CONNECTION ALSO OCCURS, PLATE THICKNESS SHALL ALSO NOT BE LESS THAN SCHEDULE PER 1/-

6 TYPICAL STIFFENER PLATE
N/A

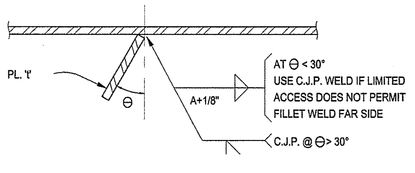

PLAN

NOTE:
FOR WELD SIZE "A", CONNX PLATE "t" AND BOLT SCHEDULE SEE DETAIL "1/-"

4 WELD AT SKEWED CONN.
N/A

gkkworks
2355 Main Street Suite 220
Irvine | CA 92614
949 250 1500
949 955 2708 fax

Architect Seal

LICENSED ARCHITECT MATTHEW S. GREINER NO. C27137 REGISTERED STATE OF CALIFORNIA

Consultant and Seal

Thornton Tomasetti
Thornton Tomasetti, Inc.
2415 Campus Drive, Suite 110
Irvine CA 92612-8530
T 949.271.3300 F 949.271.
JOB# GG7524.00

REGISTERED PROFESSIONAL ENGINEER No. S-04029 Exp. 9-30-08 STRUCTURAL STATE OF CALIFORNIA

Agency Approval

IDENTIFICATION STAMP
DIV. OF THE STATE ARCHITECT
APPL. # 04-109129
AC. ____ FLS ____ SS TB
DATE MAY 07 2008

No.	Date	Revision/Issue

Project Name

JAMES B. UTT MEMORIAL LEARNING RESOURCE CENTER RENOVATION
28000 Marguerite Parkway
Mission Viejo, California 92692

Checked By DT | Drawn By MG

Sheet Title

TYPICAL DETAILS

Sheet Number

S1.3

Project Number GG7524.00 | Scale 3/4"=1'-0"

© 2007 gkkworks, All Rights Reserved
NO PART OF THE CONTENTS OF THIS DOCUMENT MAY BE REPRODUCED OR TRANSMITTED IN ANY FORM OR BY ANY MEANS WITHOUT THE WRITTEN PERMISSION OF GKKWORKS.

P:\CAD\PROJECTS\GG7524.00 - REMODEL JAMES B. UTT LIBRARY BUILDING\DRAWINGS\STRUCTURE\REVISED\S-1.DWG - PLOTTED BY Garcia, Margarito - GRL - 14-Apr-08

GR331777--51697 P1 S2 - R.C.CONSTRUCTION SERVICES - PG 131 OF 235 (P1 S2) 1 SET.1.TIF - 23/2010 - 15:34